THESE DRAWINGS AND SPECIFICATIONS ARE THE PROPERTY OF JAMES B. LANSING SOUND INC. THEY ARE ISSUED IN STRICT CONFIDENCE AND SHALL NOT BE REPRODUCED, COPIED, OR USED AS THE BASIS FOR MANUFACTURE OR SALE OF APPARATUS WITHOUT PERMISSION.

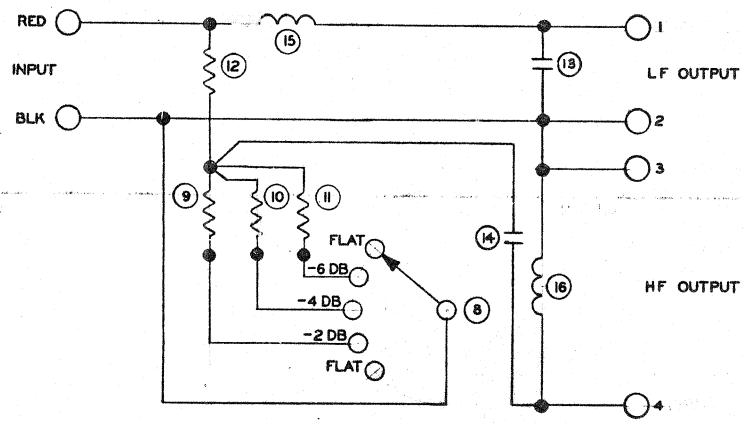

ITEM	P/N	QTY	DESC	
37	53672	4	POP RIVET	
36	13184	4	SCREW 6×32×1¼ FLT. HD. PH.	
35	48257	1	MOUNTING BOARD MRD 50291	
34	47879	1	CABLE	
33	10039	2	SCREW, 6-32×½	
32	10241	6	SOLDER LUG	
31	52259	4	THREADED RIVET 6-32	
30	13388	1	TERMINAL STRIP	
29	82862	1	TERMINAL STRIP	
28	11791	1	WIRE, RED, 30"	
27	13226	1	WIRE, GRN, 30"	
26	11789	2	WIRE, BLK, 30"	
25	10283	1	GASKET	
24	12704	6	SCREW, 6-32×1	
23	83578	1	STRAIN RELIEF	
22	10325S	1	VINYL SLEEVING, BLACK	
21	11816	1	PLUG	
20	47855	1	FOILCAL	
19	47702	1	KNOB	MRD 39923
18	47706	1	NEXTEL INSERT	MRD 47018
17	50182S	A/R	ADHESIVE	
16	51289	1	INDUCTANCE COIL, 0.7 MHY	
15	48259	1	INDUCTANCE COIL, 2.4 MHY	
14	10296	1	CAPACITOR, 6 MFD	
13	10359	1	CAPACITOR, 13.5 MFD	
12	48260	1	RESISTOR, 5Ω, 25W	
11	13202	1	RESISTOR, 4Ω, 10W	MRD 35491
10	13204	1	RESISTOR, 7.5Ω, 10W	MRD 35491
9	34754	1	RESISTOR, 15Ω, 10W	MRD 35491
8	48249	1	SWITCH	
7	10835	6	SCREW, 6-32×7/16"	
6	10817	12	WASHER, INSULATING	
5	10243	3	BINDING POST, RED	
4	10244	3	BINDING POST, BLK	
3				
2	47850	1	CONTAINER	MRD 47171
1	47849	1	FLANGE	MRD 47175

(5) STAMP "A" IN AREA TO RIGHT OF SERIAL NO.

4. FOR TEST SPECS SEE 51292 REF.

(3) LOOSE ITEMS TO BE INSTALLED WHEN NETWORK IS INSTALLED IN CABINET.

2. APPROVED ENGINEERING SAMPLE, CURRENT REVISION MAINTAINED IN ENG DEPT.

1. SECURE COMPONENTS IN CONTAINER WITH ITEM 17, ADHESIVE.

NOTES:

ECN	LET	CHANGE	DATE	BY
731A	K	REV PER E.C.O.	5/25	
5100B	J	53672 WAS 38950 (ITEM 37)	6-24	
9014	H	DELETE 10291 PLUG PER EO	4-24	

REVISIONS

ECN	LET.	CHANGE	DATE	BY
496A	G	ADD ITEM 37	12-73	
8822	F	12704: QTY. 6 WAS 10, ADDED (4) 13184.	11-73	
E.O. 8822	E	PER EO	9-73	
8622	D	PER ECN	6-73	
8588	C	PER ECN	3-73	
E.O. 8627	B	PER E.O.	2-16-73	
8607	A	ENG REL	1-73	

QTY	MODEL	NEXT DWG
—	LX16-A	—

APPLICATION

UNLESS OTHERWISE SPECIFIED DIMENSIONS ARE IN INCHES.
~~BREAK SHARP EDGES .015~~

DECIMALS .XX=±.01 .XXX=±.005 FRACTIONS X/X=±1/32 ANGULAR ±

TIR

MATERIAL:

TREATMENT:

MACHINE FINISH: √

DO NOT SCALE DRAWING

DRAWN: 1/15/73
CHECK: 1/17/73
DESIGN:
ENGR:
APPR: 1-17-73

JAMES B. LANSING SOUND, Inc.
Los Angeles, Calif. 90039

TITLE: MFD ITEM-LX16-A

SIZE C | MFD ITEM | DRAWING NUMBER 51290 | REV K

SCALE: — WEIGHT: — SHEET 1 OF 1