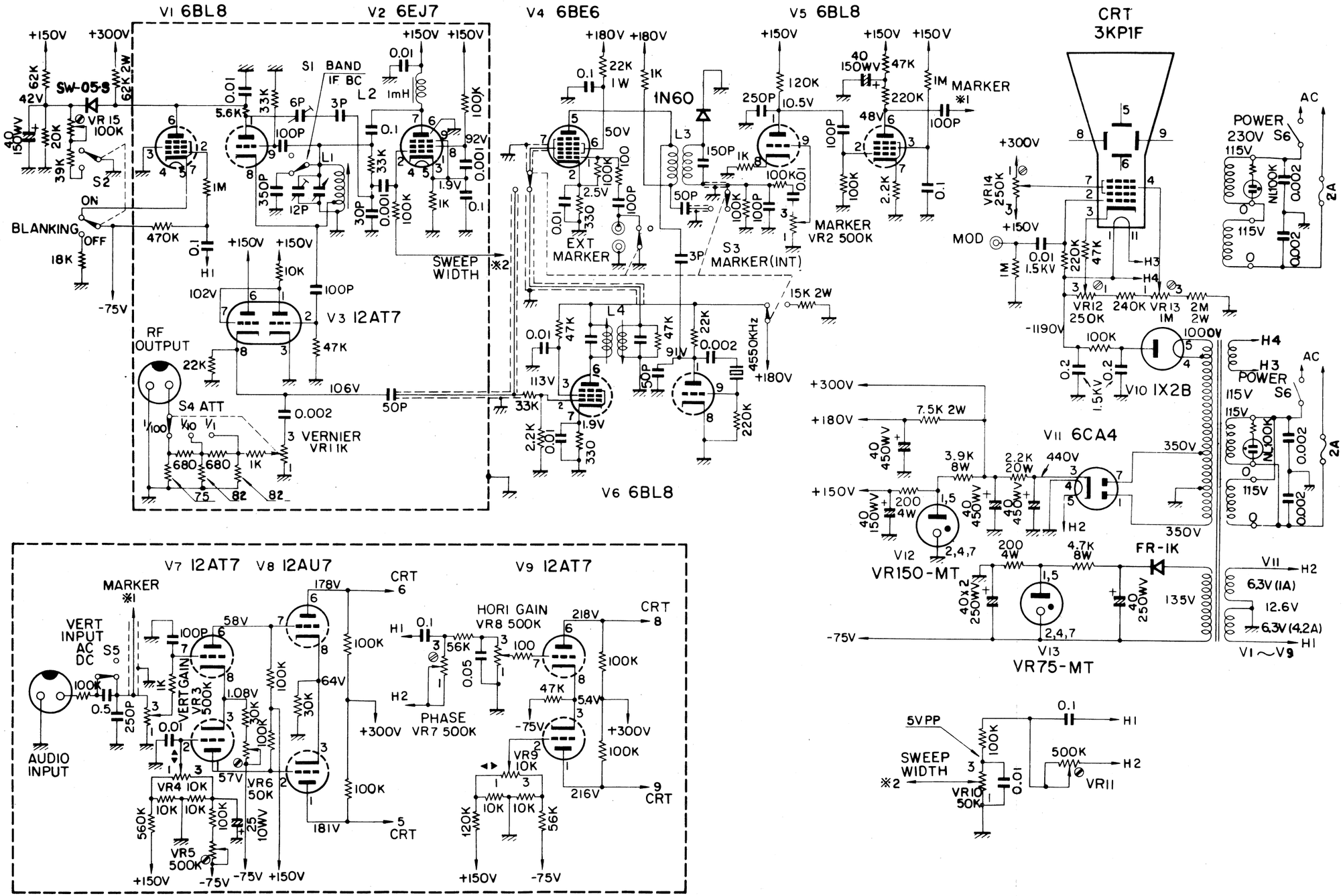
V1 6BL8
V2 6EJ7
V4 6BE6
V5 6BL8
CRT 3KP1F
V3 12AT7
V6 6BL8
V7 12AT7
V8 12AU7
V9 12AT7
V10 1X2B
V11 6CA4
V12 VR150-MT
V13 VR75-MT
SW-05-S
S1 BAND IF BC
S2 BLANKING ON OFF
S3 MARKER(INT)
S4 ATT
S5 VERT INPUT AC DC
S6 POWER 230V
RF OUTPUT
3 VERNIER VR1 1K
EXT MARKER
MARKER VR2 500K
MARKER ※1
MOD
SWEEP WIDTH ※2
VERT GAIN VR3 500K
HORI GAIN VR8 500K
PHASE VR7 500K
AUDIO INPUT
FR-1K
6.3V (1A)
12.6V
6.3V (4.2A)
5VPP
SWEEP WIDTH ※2
VR10 50K
VR11 500K
VR12 250K
VR13 1M
VR14 250K
VR15 100K
VR4 10K
VR5 500K
VR6 50K
VR9 10K
1N60
4550KHz
CRT 6
CRT 8
CRT 5
CRT 9
+150V
+300V
+180V
-75V
-1190V
1000V
350V
135V
440V
H1
H2
H3
H4
AC
2A