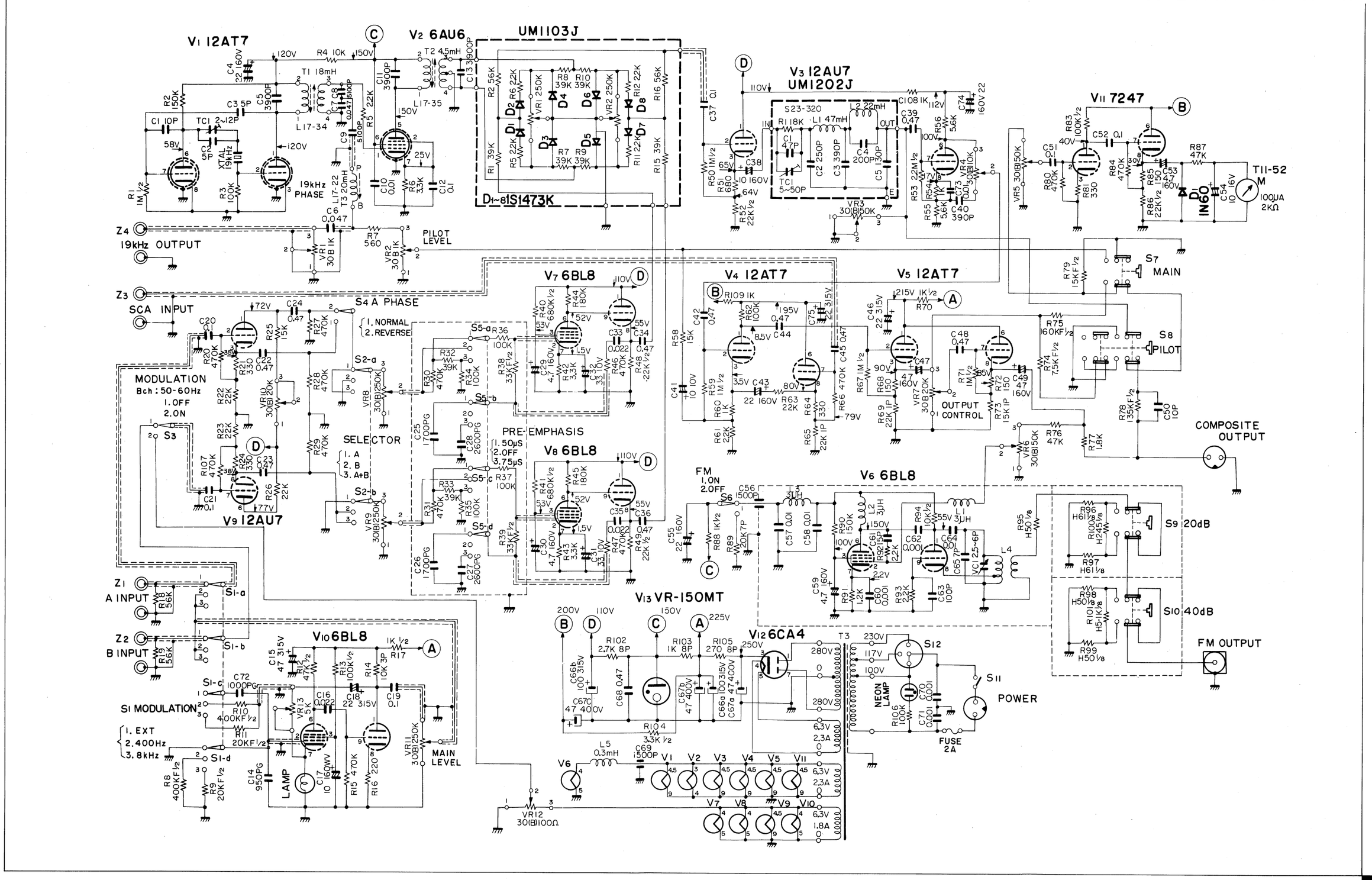
V1 12AT7
V2 6AU6
UM1103J
D1~8 1S1473K
V3 12AU7
UM1202J
V11 7247
T11-52
100μA
2KΩ
19kHz PHASE
Z4
19kHz OUTPUT
PILOT LEVEL
Z3
SCA INPUT
S4 A PHASE
1. NORMAL
2. REVERSE
MODULATION
Bch: 50-60Hz
1. OFF
2. ON
SELECTOR
1. A
2. B
3. A+B
V9 12AU7
V7 6BL8
V8 6BL8
PRE-EMPHASIS
1. 50μS
2. OFF
3. 75μS
V4 12AT7
V5 12AT7
OUTPUT CONTROL
S7 MAIN
S8 PILOT
COMPOSITE OUTPUT
FM
1. ON
2. OFF
V6 6BL8
S9 20dB
S10 40dB
FM OUTPUT
Z1
A INPUT
Z2
B INPUT
V10 6BL8
S1 MODULATION
1. EXT
2. 400Hz
3. 8kHz
LAMP
MAIN LEVEL
V13 VR-150MT
V12 6CA4
NEON LAMP
S12
S11
POWER
FUSE 2A
VR12 30(B)100Ω