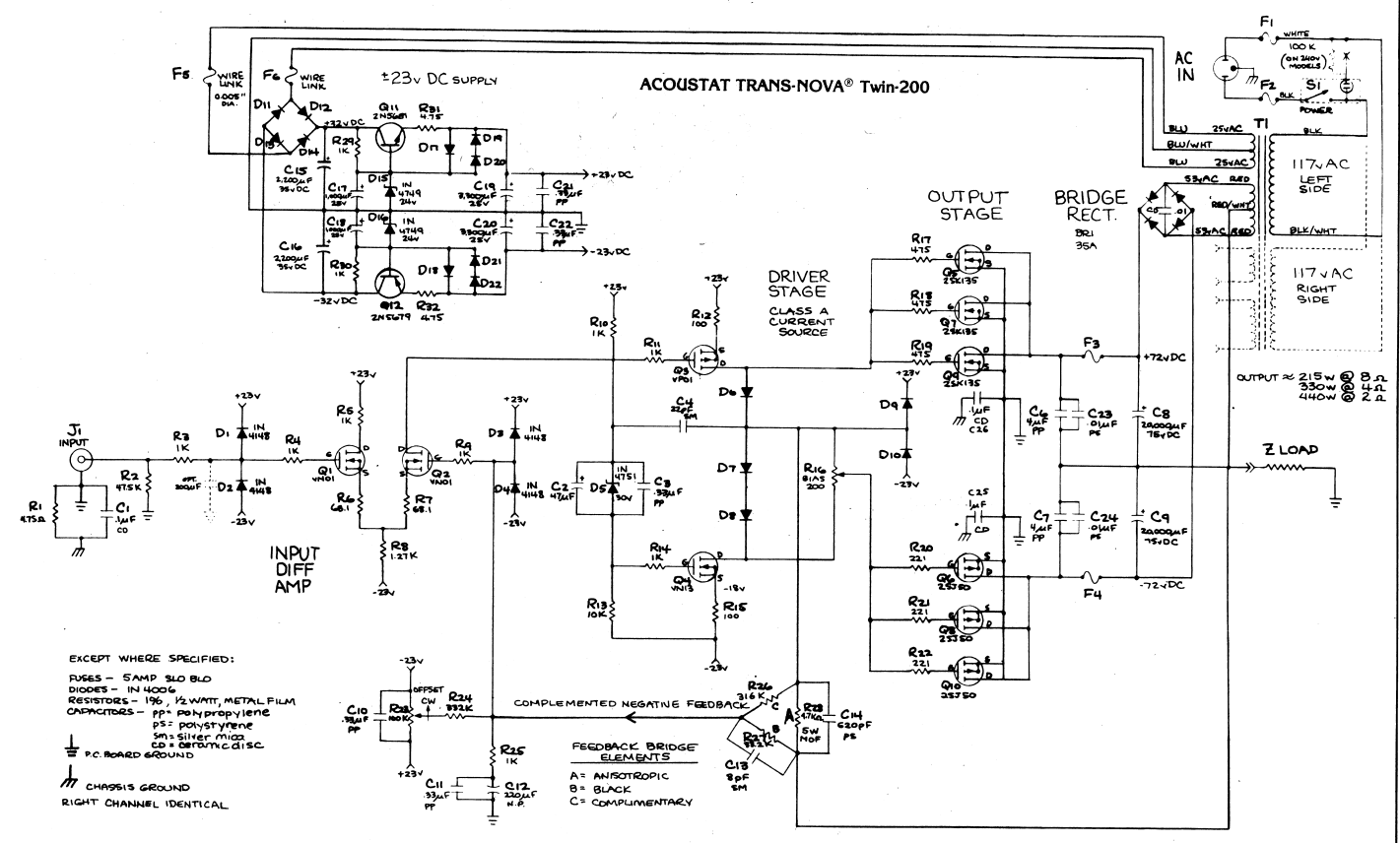
ACOUSTAT TRANS-NOVA® Twin-200
±23v DC SUPPLY
F5 WIRE LINK 0.005" DIA.
F6 WIRE LINK
D11 D12 D13 D14
+32vDC
-32vDC
R29 1K
R30 1K
Q11 2N5679
Q12 2N5679
R31 4.75
R32 4.75
D15 D16 D17 D18 D19 D20 D21 D22
IN 4749 24v
C15 2,200µF 35v DC
C16 2,200µF 35v DC
C17 1,000µF 25v
C18 1,000µF 25v
C19 2,500µF 25v
C20 2,500µF 25v
C21 .33µF PP
C22 .33µF PP
+23vDC
-23vDC
AC IN
F1 WHITE
100K (ON 240v MODELS)
F2 BLK
Si POWER
T1
BLU 25vAC
BLU/WHT
BLU 25vAC
53vAC RED
RED/WHT
53vAC RED
BLK
117vAC LEFT SIDE
BLK/WHT
117vAC RIGHT SIDE
OUTPUT ≈ 215w @ 8Ω
330w @ 4Ω
440w @ 2Ω
OUTPUT STAGE
BRIDGE RECT.
BRI 35A
R17 475
R18 475
R19 475
R20 221
R21 221
R22 221
Q6 2SK135
Q7 2SK135
Q8 2SK135
Q9 2SD50
Q10 2SD50
.1µF CD C26
C25 .1µF CD
C6 4µF PP
C7 4µF PP
C33 .01µF PS
C24 .01µF PS
C8 20,000µF 75vDC
C9 20,000µF 75vDC
F3
F4
+72vDC
-72vDC
Z LOAD
DRIVER STAGE
CLASS A CURRENT SOURCE
+23v
R12 100
Q5 VP01
R10 1K
R11 1K
D6
D7
D8
D9
D10
C4 .22µF SM
R16 BIAS 200
R14 1K
Q4 VN13
R15 100
R13 10K
-18v
-23v
C2 47µF
D5 IN 4751 30v
C3 .33µF PP
J1 INPUT
R3 1K
R4 1K
R2 475K
R1 475Ω
C1 .1µF CD
D1 IN 4148
D2 IN 4148
D3 IN 4148
D4 IN 4148
OPT. 300µF
Q1 VN01
Q2 VN01
R5 1K
R6 68.1
R7 68.1
R8 1.27K
R9 1K
INPUT DIFF AMP
EXCEPT WHERE SPECIFIED:
FUSES – 5AMP SLO BLO
DIODES – IN 4006
RESISTORS – 196, ½ WATT, METAL FILM
CAPACITORS – pp = polypropylene
ps = polystyrene
sm = silver mica
cd = ceramic disc
P.C. BOARD GROUND
CHASSIS GROUND
RIGHT CHANNEL IDENTICAL
OFFSET CW
R23 100K
R24 332K
C10 .33µF PP
C11 .33µF PP
C12 220µF N.P.
R25 1K
COMPLEMENTED NEGATIVE FEEDBACK
R26 316K
R27 332K
R28 47KΩ 5W NOF
C14 620PF PS
C13 8PF SM
FEEDBACK BRIDGE ELEMENTS
A = ANISOTROPIC
B = BLACK
C = COMPLIMENTARY