Admiral

CHASSIS 1B1·1C1·1D1
MODELS 1B11·1C12·1C14·1D11·1D12·1E13·1E14

NEEDLE SELECTOR

The phonograph in models 1D11, 1D12, 1E13 and 1E14 is equipped with two needles; one for playing 16, 33 and 45 RPM records; the other for playing standard "78" RPM records. The phonograph in models 1B11, 1C12 and 1C14 is equipped with two needles and will play 33, 45, and standard "78" RPM records.

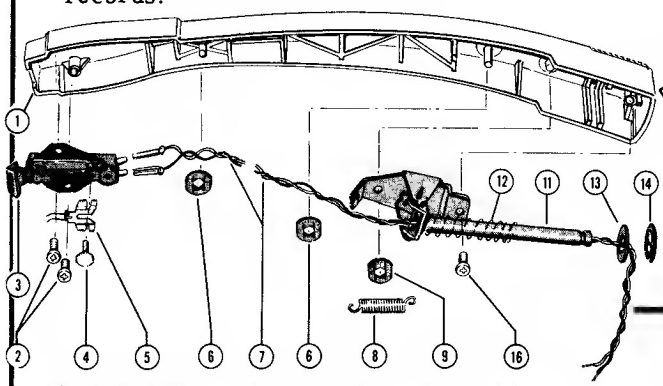

Exploded View of Pickup Arm Assembly.

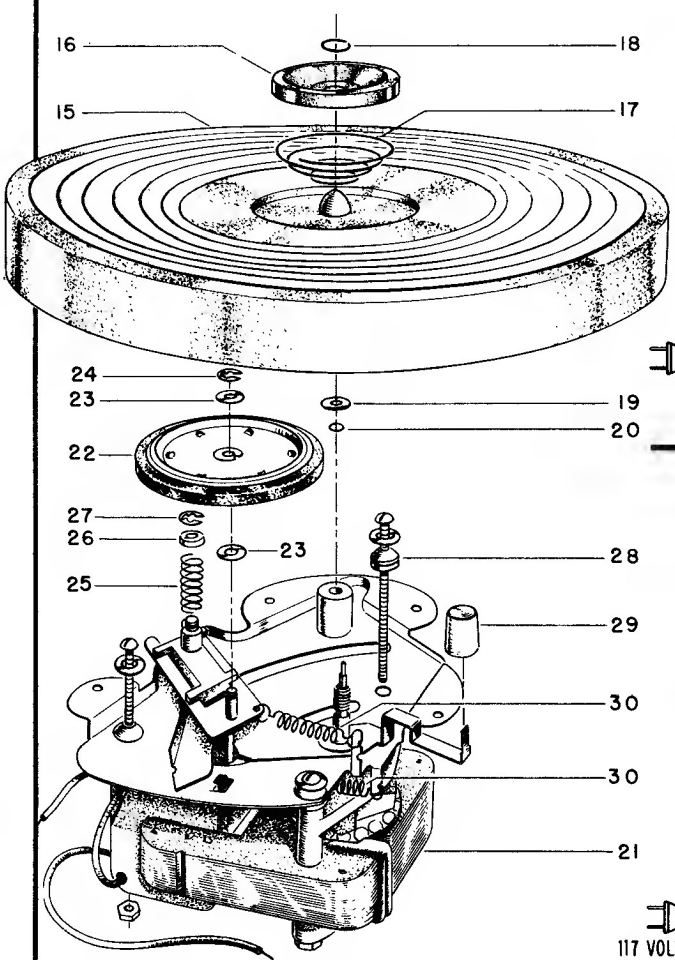

Exploded View of Motor and Turntable.

1B1 CHASSIS

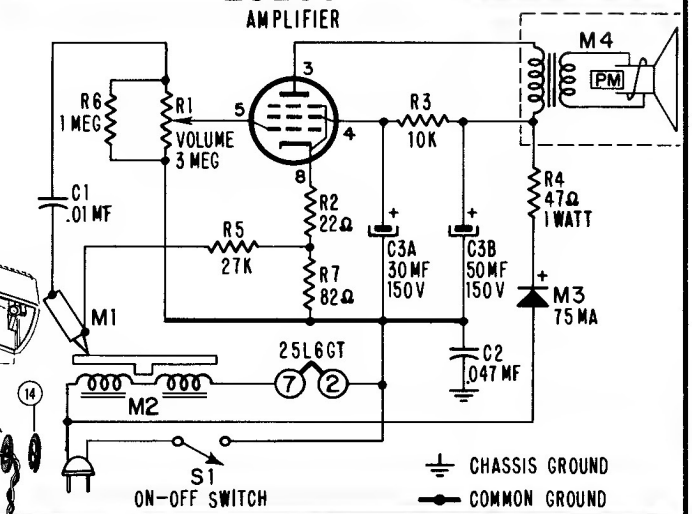

1C1 CHASSIS

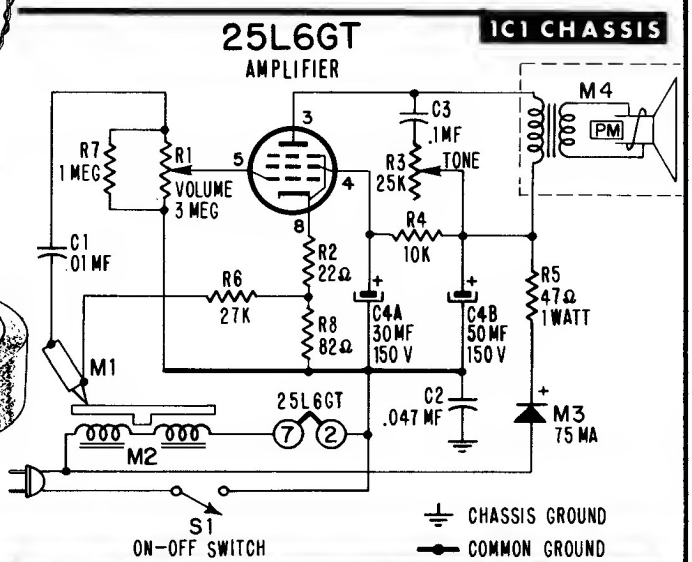
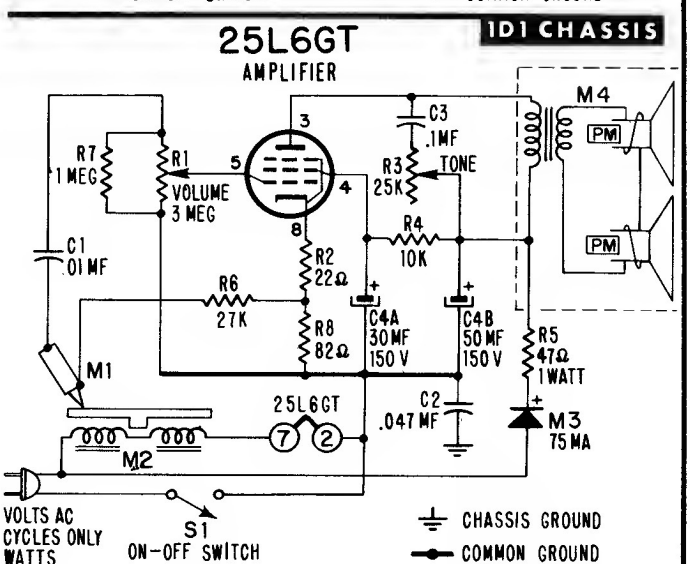
1D1 CHASSIS