Admiral

CHASSIS 200 and 4W2
MODELS 202 • 215 • 217 • 218

200 Chassis

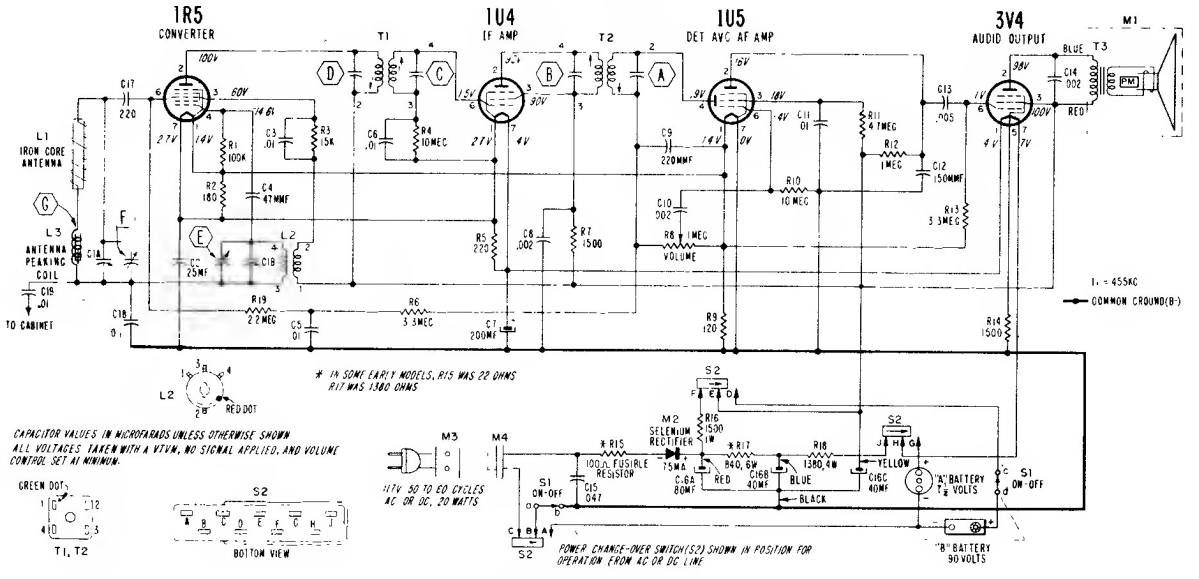

4W2 Chassis

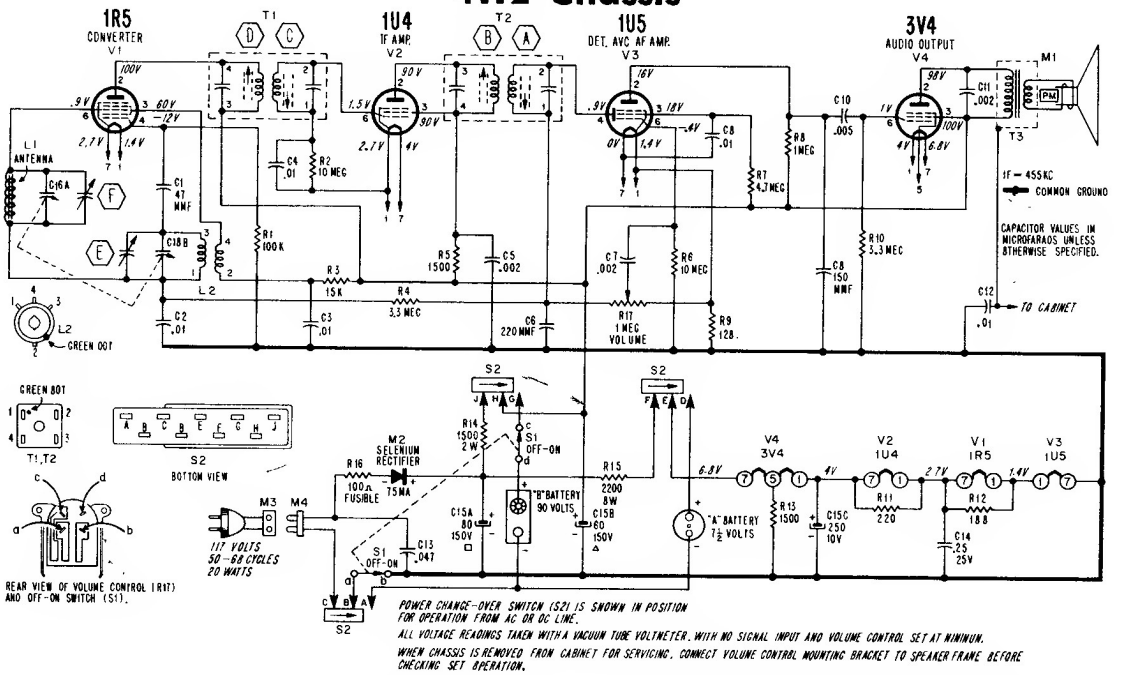

REMOVING THE CHASSIS

1. Remove Tuning knob and Volume Control knob by working them forward and off their shafts.
2. Open cover on rear of cabinet.
3. On front of cabinet, *loosen*, but do not remove, two screws adjacent the tuning shaft.
4. *Loosen*, but do not remove, the hexnut that secures volume control shaft to cabinet front.
5. On chassis 4W2 only, remove Phillips screw that holds chassis to rear of speaker.
6. On 200 series chassis, remove the 1U4 vacuum tube. Remove the Phillips screw that connects through middle of selenium rectifier.
7. To prevent damage, hold the printed wiring board while removing the two screws and hex-nut located on cabinet front.
8. Gently lift the printed wiring board from within the case.
9. By straightening the four prongs which hold speaker frame to cabinet, the speaker may be removed.

Admiral

CHASSIS 200 and 4W2
MODELS 202 • 215 • 217 • 218

CHASSIS IDENTIFICATION

To determine whether the chassis is a 4W2 or 200 series, check the label pasted inside of the cabinet back cover. This label identifies the chassis by number. If the label has been torn out or otherwise removed, the chassis used can be determined by the clearance between the printed wiring board and the top of the cabinet. On the 4W2 chassis there is enough space for storing the power line cord above wiring board. On 200 chassis, line cord is stored below chassis.

SERVICING

Replace resistors and capacitors by clipping out the defective part and leaving the pigtail leads as long as possible. Then, solder the replacement part onto the remaining pigtail leads.

Remove components such as coils, IF transformers, and tube sockets by alternately heating and loosening each pin. Brush away melted solder as each pin is heated.

Use a low wattage soldering iron, 35 watts or less.

ALIGNMENT PROCEDURE

- When this set is aligned while operating on the AC power line, an isolation transformer should be used. If an isolation transformer is not available, connect a .1 mfd. capacitor in series with the signal generator low side to B minus (pin 7 of 1U5 tube).
- Set Volume control to maximum.
- DO NOT connect earth ground to common ground (see figs. 2 and 4).
- Connect output meter across speaker voice coil.
- Use lowest setting of signal generator capable of producing adequate indication on lowest scale of output meter.
- Use a non-metallic alignment tool with 3/32" wide blade to avoid splitting slotted cores on IF transformers.
- Repeat adjustments to insure good results.

Step	Dummy Antenna in Series with Signal Generator	Connection of Signal Generator (High Side)	Signal Generator Frequency	Receiver Gang Setting	Adjustment Description	Adjustment Designation	Type of Adjustment
1	.1 mfd. capacitor	Stator of antenna tuning capacitor	455 KC	Gang fully open	2nd IF 1st IF	*"A", "B", "C" and "D"	Maximum output
2	Loop of several turns of wire, or place generator lead close to receiver for adequate signal pickup.	No actual connection (signal by radiation)	1620 KC	Gang fully open	Oscillator (on gang)	"E"	"Same as Step 1"
3	"Same as Step 2"	"Same as Step 2"	1400 KC	Tune in on generator signal	Antenna (on gang)	"F"	"Same as Step 1"
4 200 chassis only	"Same as Step 2"	"Same as Step 2"	600 KC	"Same as Step 3"	Antenna peaking coil	"G"	"Same as Step 1"
5 200 chassis only	Repeat Steps 3 and 4 until proper tracking is achieved.						

*Adjustments "B" and "D" on chassis 4W2 are made from foil side. Adjustments "B" and "C" on chassis 200 are made from foil side. Remove chassis to make these IF transformer adjustments.

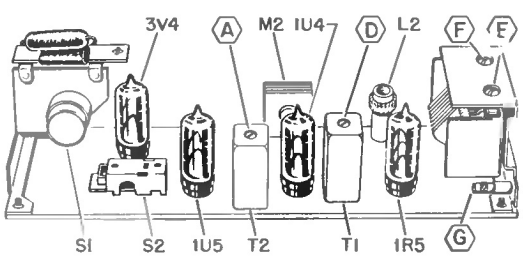

Figure 1. Top View of Chassis 200. Tube Locations and Alignment Points Shown.

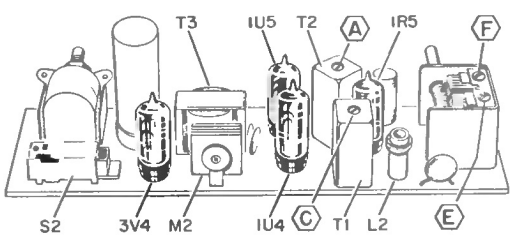

Figure 3. Top View of Chassis 4W2 Tube Locations and Alignment Points Shown.

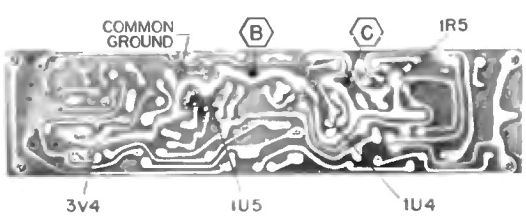

Figure 2 Bottom View of Chassis 200. Tube Locations and Alignment Points Shown.

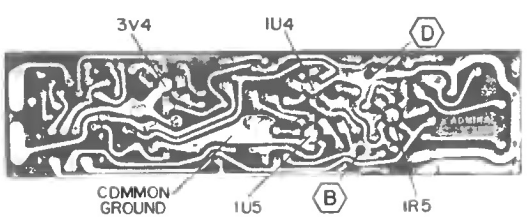

Figure 4. Bottom View of Chassis 4W2. Tube Locations and Alignment Points Shown.