Admiral
Chassis 3K1
HIGH FIDELITY PHONOGRAPH

MODEL	COLOR	CHASSIS
HT2236 HT2237	Mahogany Blond	3K1 3K1

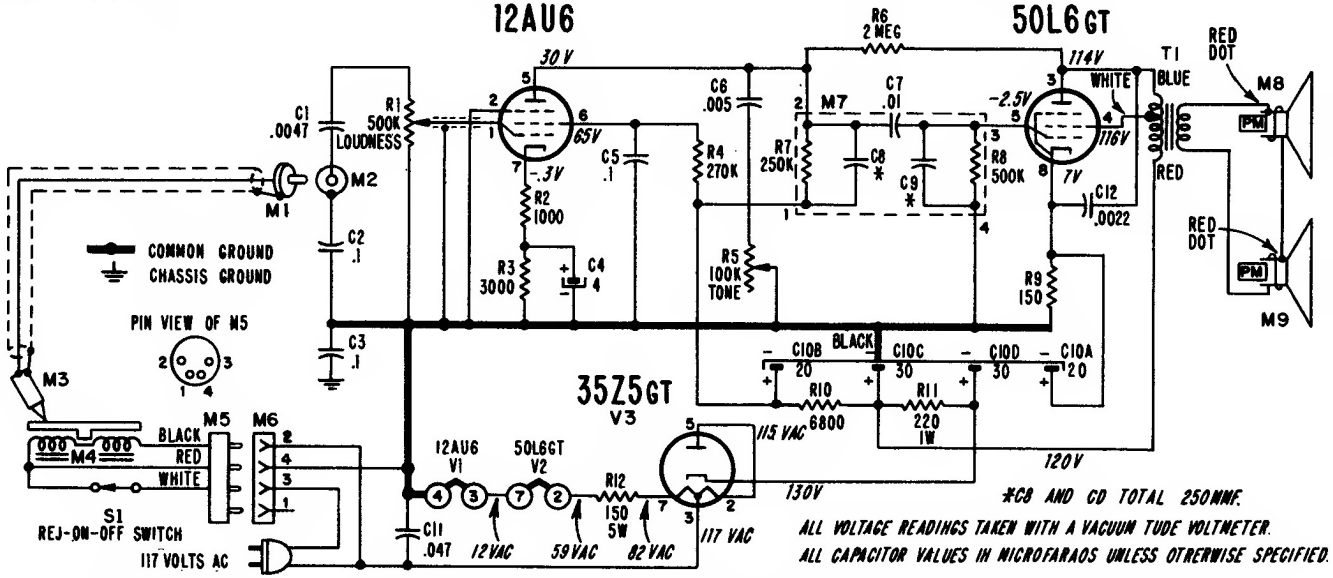

Admiral
CHASSIS 4T2
Models 341, 347, 362, 363, 364, 366, 372, 373

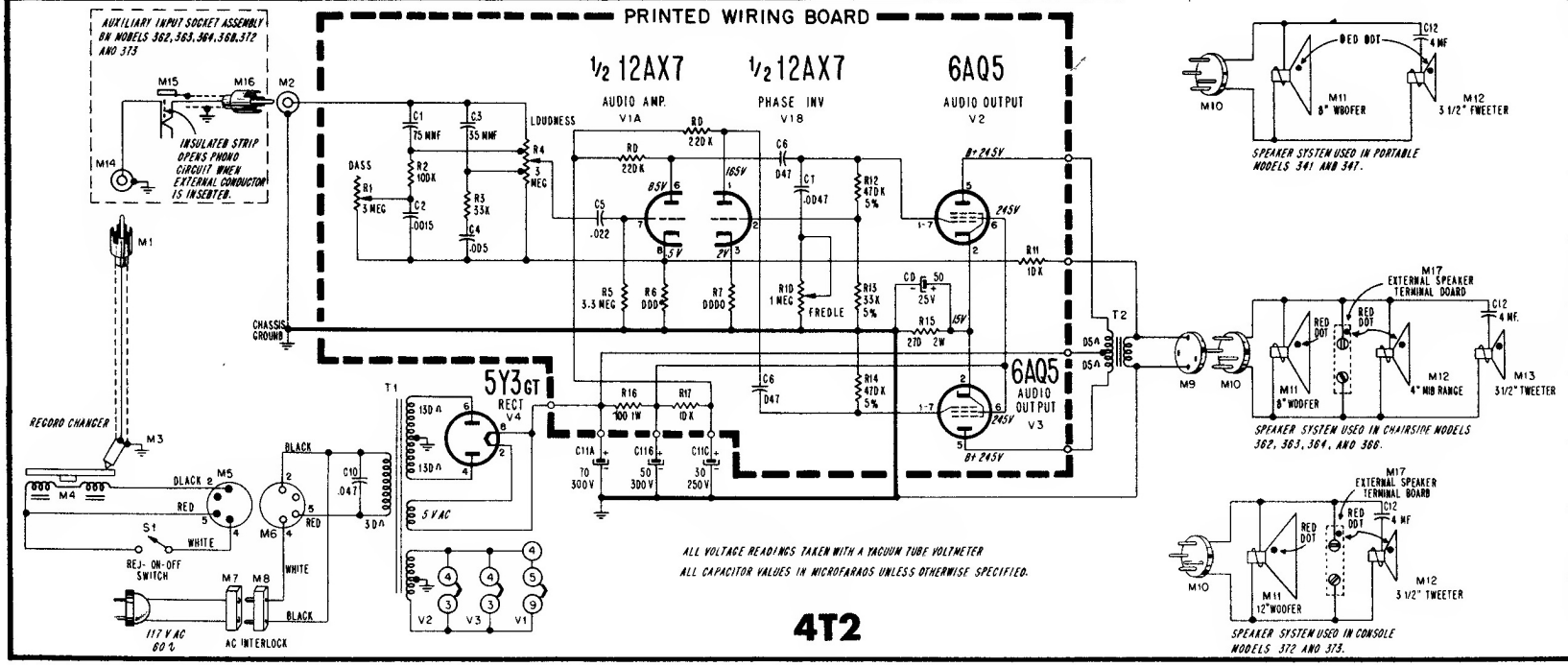

4T2