Admiral 6R2B

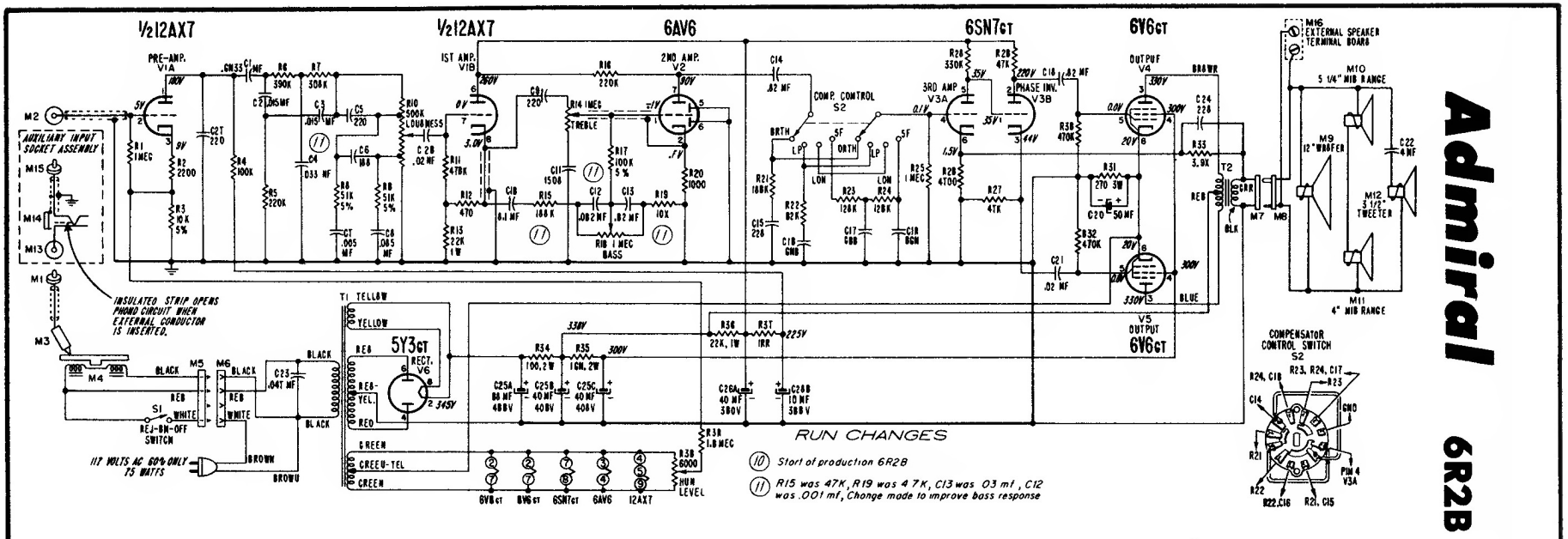

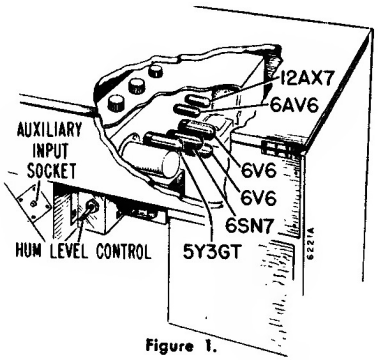

Figure 1.

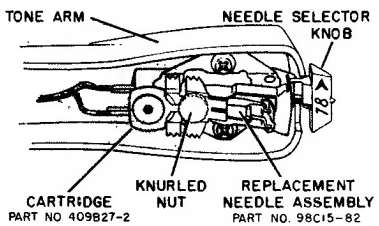

Figure 2.

TROUBLE SHOOTING HINTS

If the phonograph sounds weak or distorted, examine the needles for wear. A worn needle will cause excessive needle scratch and a harshness of treble tones. Test the tubes by substitution and then, if possible, try a new cartridge. Check voltage at tube pins against voltage readings shown on schematic.

SERVICE NOTE: The **Rej-On-Off** pointer (S1) on the record changer is used to turn both amplifier and record changer motor on and off. To turn the amplifier on with the record changer disconnected, a short, temporary jumper wire must be connected between the white and red leads on socket "M6". See schematic.

Amplifier voltage readings may also be taken by connecting the record changer motor plug (M5) to the socket (M6) on the chassis. Unclamp the **Tone Arm** from the tone arm rest and slide the **Rej-On-Off** pointer to the "ON" position. Set **Loudness** control for minimum and **Bass** and **Treble** controls to center rotation. Set **Compensation** control to "LON". Do not play a record while taking readings.

HUM LEVEL ADJUSTMENT

The **Hum Level** control (R39 on schematic) can be set to eliminate any stray 60 cycle hum appearing in the amplifier output. Make the Hum Level adjustment as follows:

1. Turn set on by sliding **Rej-On-Off** pointer to "ON". Set **Compensation** control to "LON"; **Bass, Treble** and **Loudness** controls to "MAX" (fully clockwise).
2. Touch record changer centerpost. If hum level of amplifier output increases, reverse line cord in wall outlet. Touch centerpost again. Leave line cord plug in position that gives least amount of hum when centerpost is touched.
3. Find **Hum Level** control shaft which extends from rear of chassis (see figure 1). Vary control for minimum hum in output. (Setting R39 for minimum hum feeds to control grid of V1A an out-of-phase 60 cycle voltage of an amplitude sufficient to cancel out any stray 60 cycle hum picked up by amplifier.)

VOLTAGE DATA

Voltage readings made in reference to chassis ground.

HI-FI CONSOLE PHONOGRAPH

MODEL	COLOR	CHASSIS	CHANGER
382	Mahogany	6R2B	RC637-2
383	Blonde		
384	Sierra		