Admiral

CHASSIS 4P2

MODELS 4P21 · 4P22 · 4P24 · 4P28

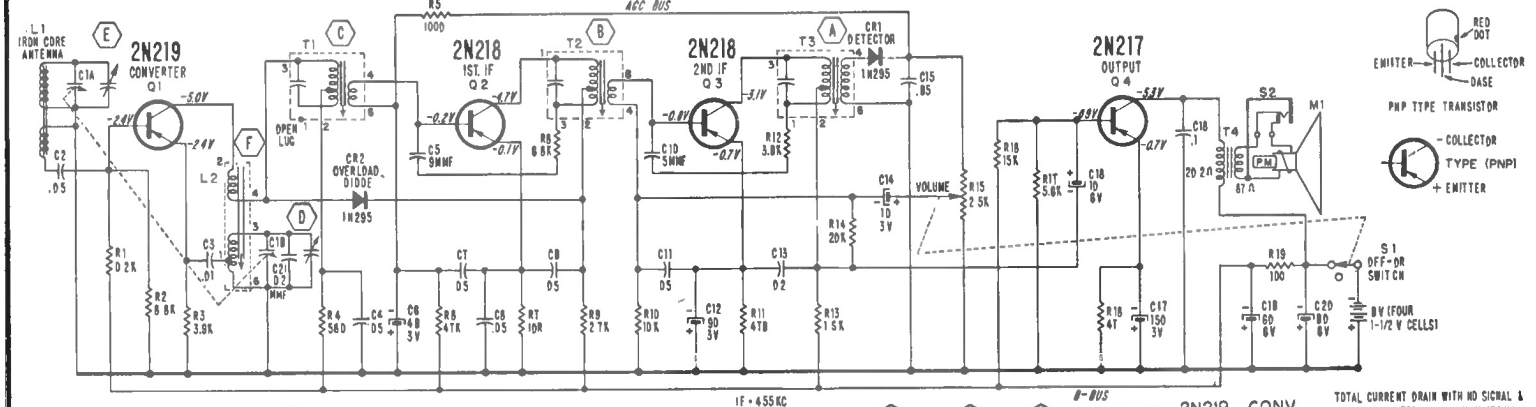

Admiral

I.F. 455 KC.

COMMON GROUND

CAPACITOR VALUES IN MICROFARADS UNLESS OTHERWISE SPECIFIED

TOTAL CURRENT DRAIN WITH NO SIGNAL & VOLUME CONTROL AT MINIMUM, 17.0 MA

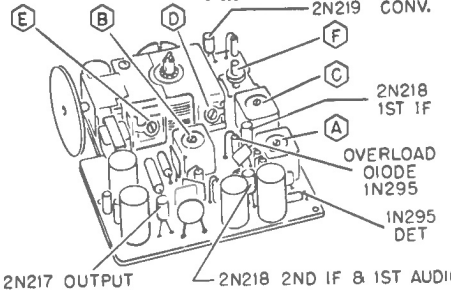

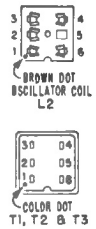

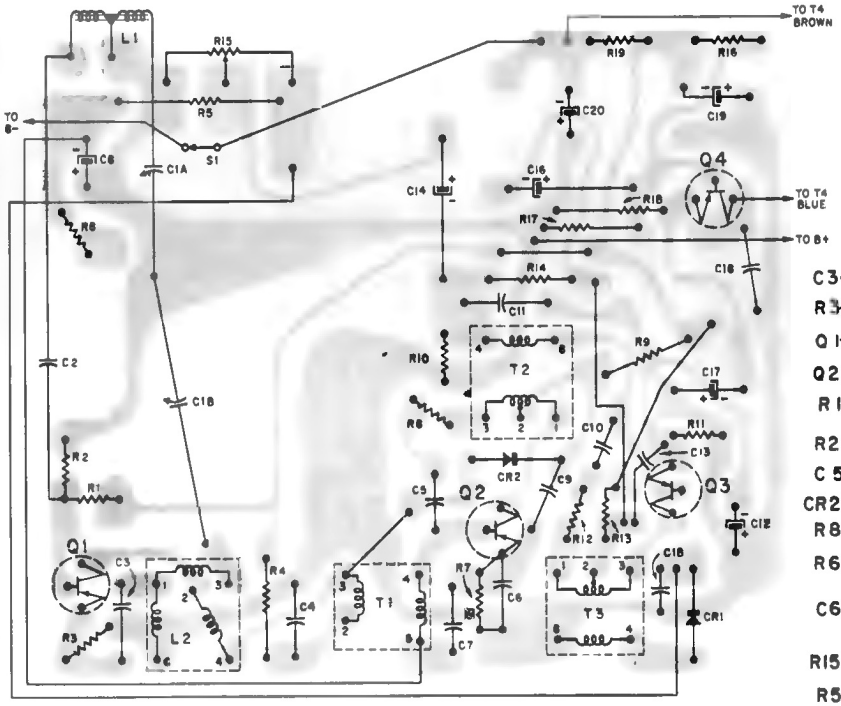

View of printed Wiring Board. NOTE: Gray area represents printed wiring, black symbols and lines represents components, wiring and connections on opposite side.

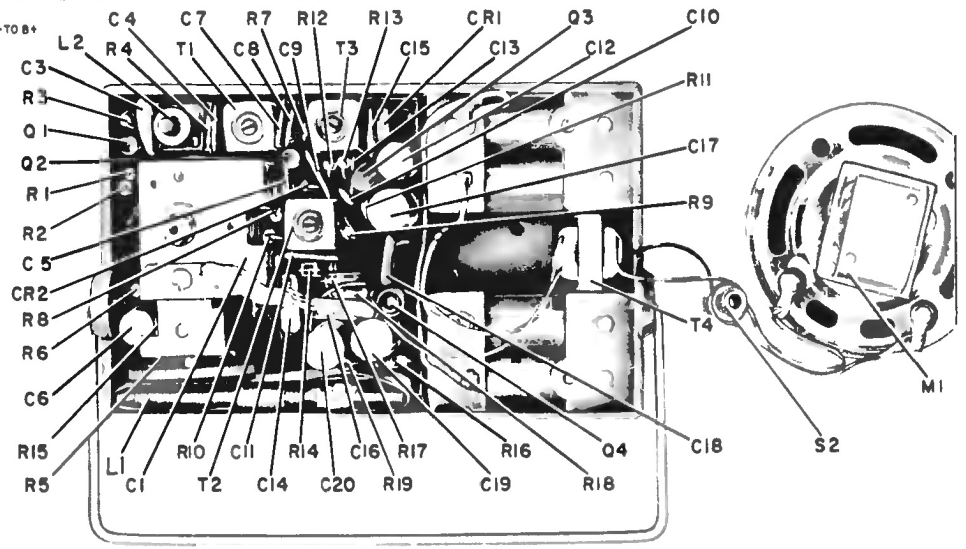

Top View of Chassis Showing Parts Locations