# Admiral

Models 5F31, -A, -B, 5F32, -A, -B, 5F33, -A, -B, 5F34B, 5F38, -A, -B. **CHASSIS 5F3, 5F3A, 5F3B**

| Step | Dummy Antenna in Series with Signal Generator | Connection of Signal Generator (High Side) | Signal Generator Frequency | Receiver Gang Setting | Adjustment Description | Adjustment Designation | Type of Adjustment |
|---|---|---|---|---|---|---|---|
| 1 | .1 mfd. capacitor | Antenna stator of tuning capacitor | 455 KC | Gang fully open | 2nd IF 1st IF | A, B, C, D | Maximum output |
| 2 | .1 mfd. capacitor | Antenna stator of tuning capacitor | 1620 KC | Gang fully open | Oscillator | E | Maximum output |
| Set tuning pointer with tuning gang tuned to 1400 KC generator signal; see illustration below. | | | | | | | |
| 3 | Loop of several turns of wire, or place generator lead close to receiver loop for adequate signal pickup. | No actual connection (signal by radiation) | 1400 KC | Tune in generator signal | Antenna | F | Maximum output |

Voltages shown on schematic diagram.

All readings made between tube socket terminals and B minus (terminal of On-Off switch).

Measured on 117 Volt AC line.

Volume control minimum; dial set at low frequency end.

Voltages measured with vacuum-tube voltmeter.

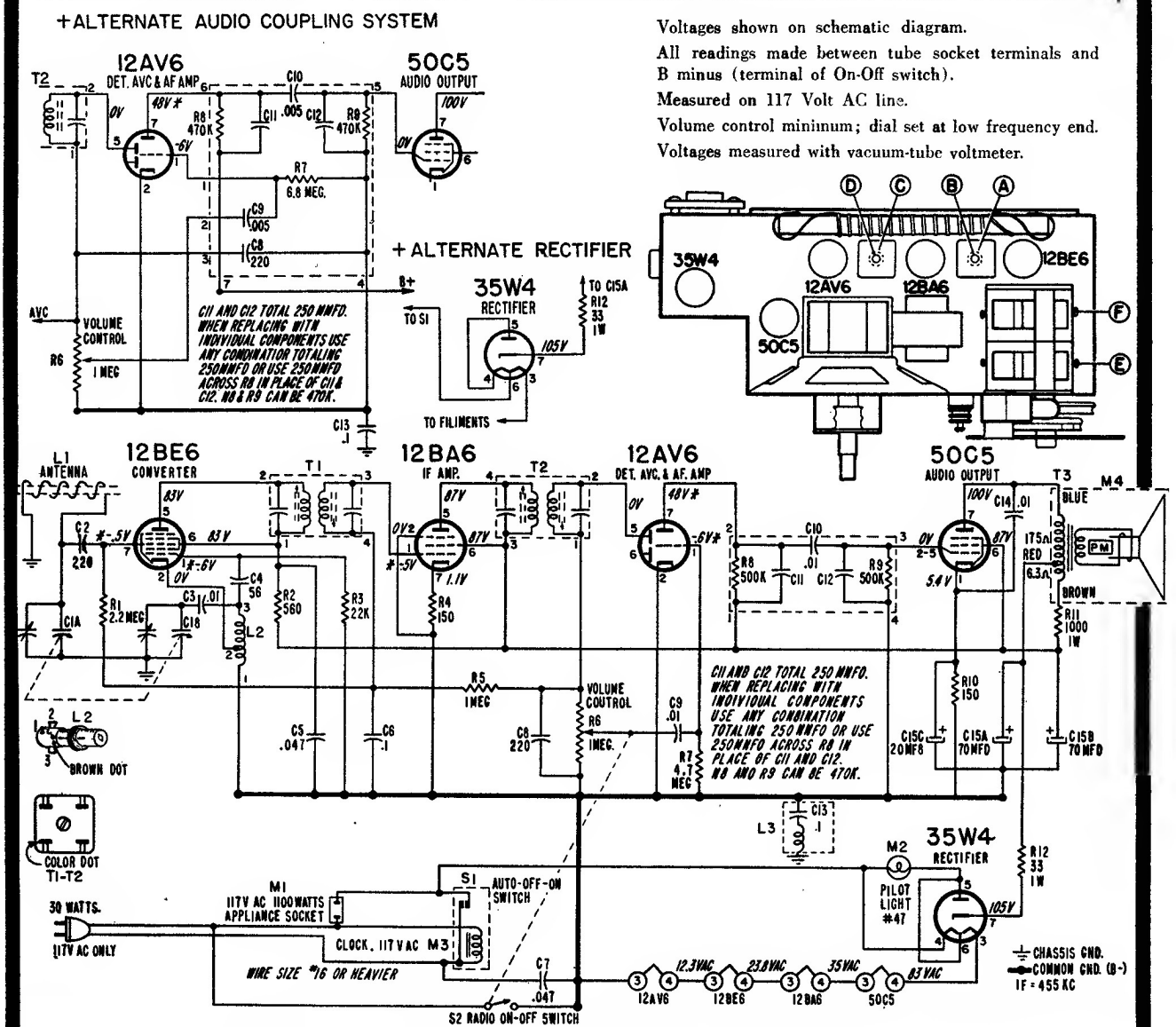


* THESE VOLTAGE READINGS WILL BE EITHER LOWER OR PRACTICALLY ZERO IF TAKEN WITH A 1000-OHMS-PER-VOLT METER.

+ USED ON 5F3A, 5F3B CHASSIS.