Admiral

CHASSIS 5RP4, 5RP4A
MODELS 5RP41, 5RP42

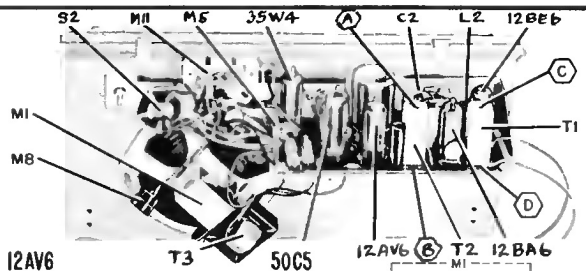

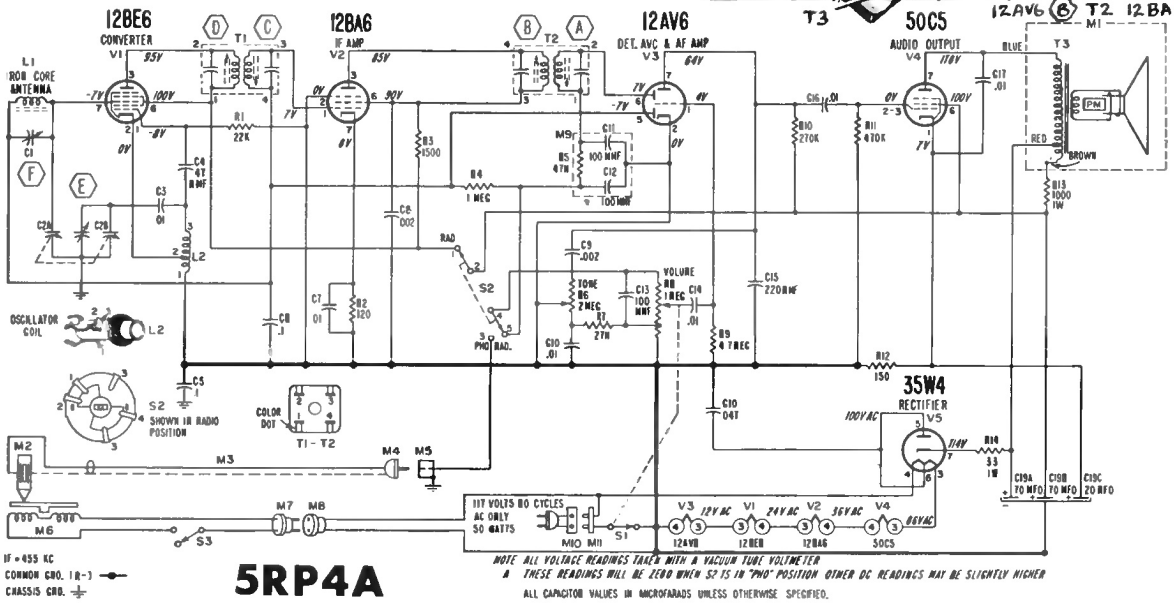

5RP4A

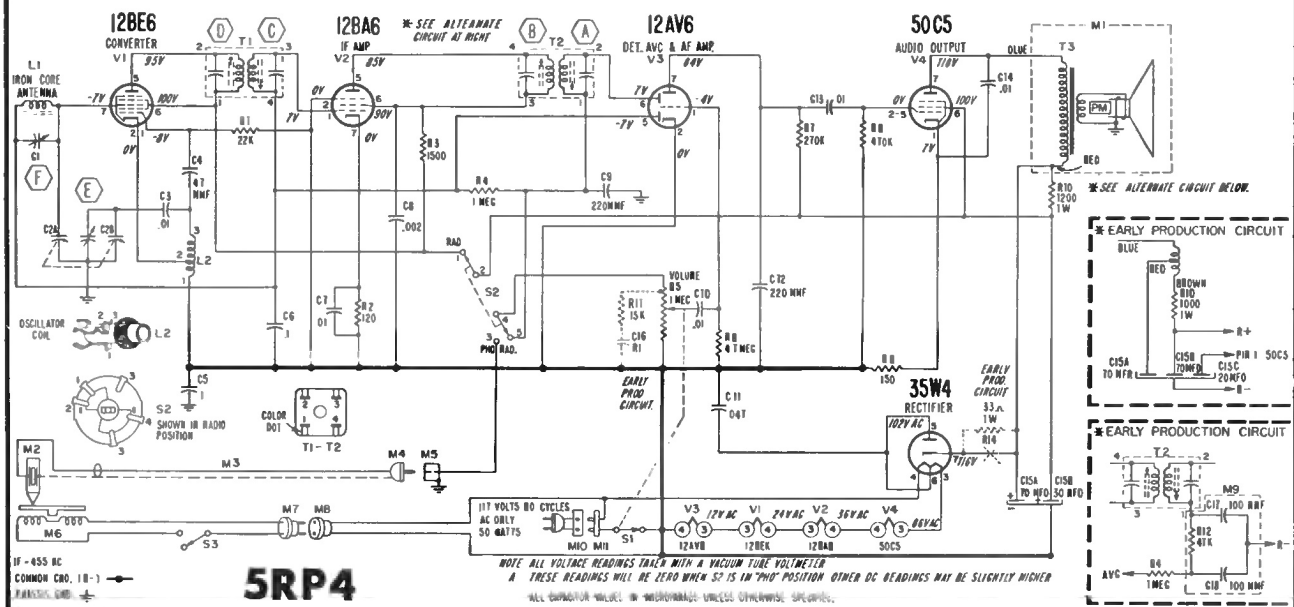

5RP4

Step	Connection Of Signal Generator	Signal Generator Frequency	Receiver Gang Setting	Adjustment
1	Through a .1 mf capacitor to pin 7 of the 12BE6 (Converter) tube.	455 KC	Gang fully open	"A", *"B", "C" and "D" for maximum output
2	Same as "Step 1"	1620 KC	Gang fully open	"E" for maximum output
3	Radiated Signal. Place signal generator lead near enough antenna for adequate signal pickup.	1400 KC	1400 KC	**"F" for maximum output