# ADMIRAL

CHASSIS 6V3, MODELS Y2332, Y2333, Y2338

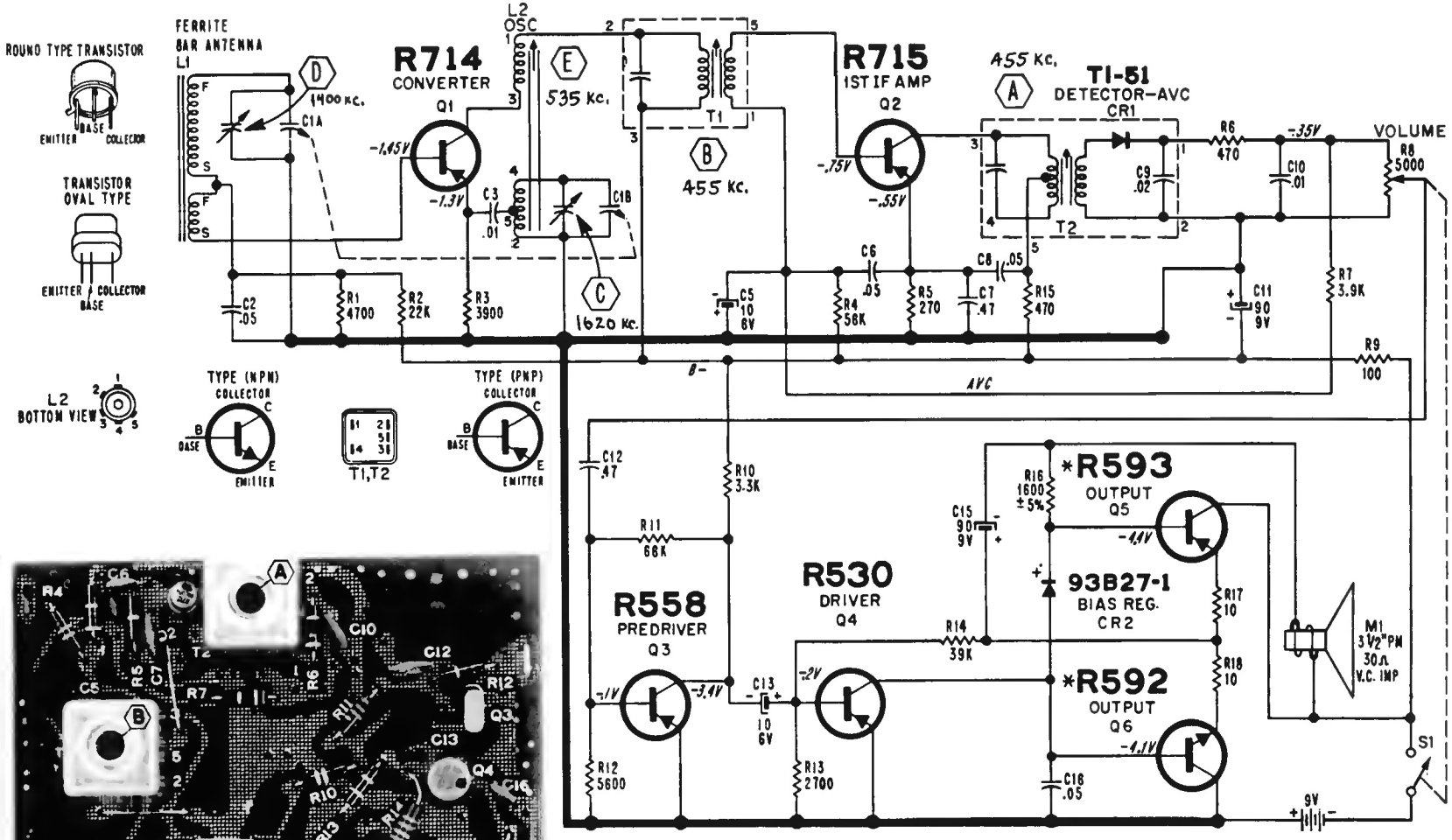


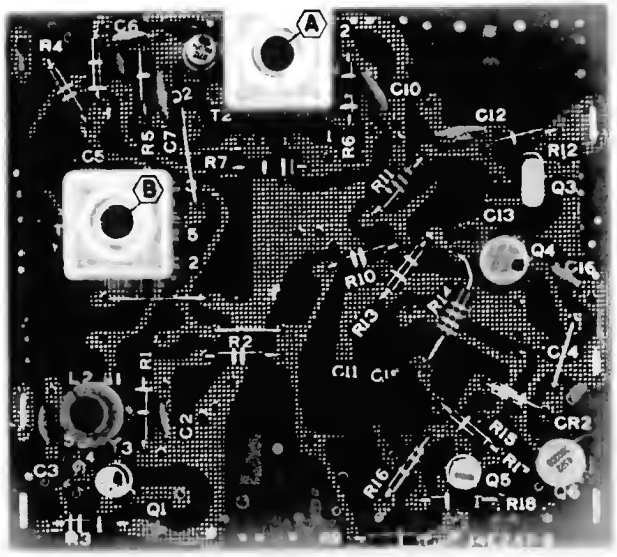


TOP VIEW OF ETCHED CIRCUIT BOARD SHOWING ALIGNMENT POINTS.

(C) AND (D) TRIMMERS ON GANG CAPACITOR

NOTES:

COMMON ETCHED CIRCUIT GROUND.
UNLESS OTHERWISE SPECIFIED:
CAPACITOR VALUES IN MICROFARADS.
RESISTOR VALUES IN OHMS. 1/2 WATT. 10%.
VOLTAGE AND CURRENT READINGS TAKEN WITH FRESH BATTERY. NO SIGNAL.
VOLUME CONTROL MINIMUM.
TOTAL CURRENT DRAIN.
NO SIGNAL = 8 -10 MA.
IF = 455KC
* MATCHED PAIR.

**FREQUENCY RANGE:** Standard broadcast band; 535 to 1620 KC.

**INTERMEDIATE FREQUENCY:** 455 KC.

**POWER SUPPLY:** One 9 Volt battery (Eveready 246 or equivalent).

ADMIRAL

MODEL: Y2330 Series
CHASSIS: 6V3