ADMIRAL

CHASSIS 5S5
MODELS Y3046 - Y3048 - Y3049

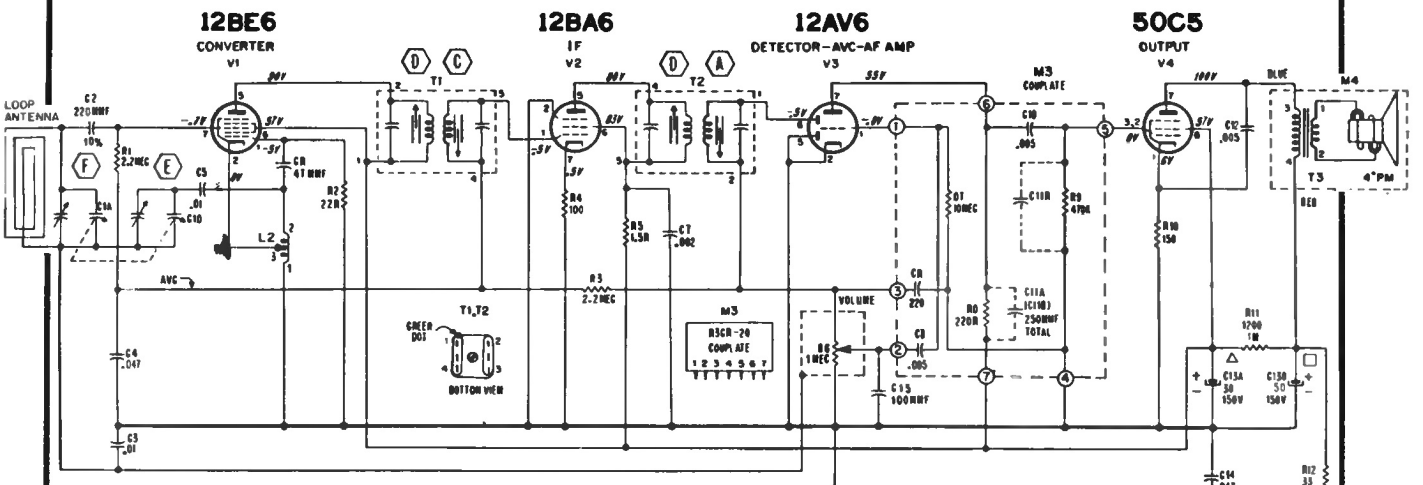

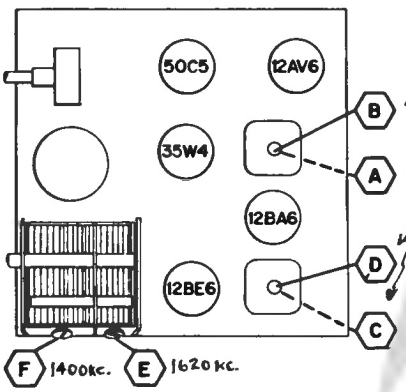

Top View of Chassis Showing Tube and Alignment Point Locations.

NOTES: IF = 455KC

ETCHED CIRCUIT GROUND

ALL VOLTAGES TAKEN WITH VTVM. NO SIGNAL INPUT.

ALL CAPACITORS VALUES IN MF, 20%; ALL RESISTORS 1/2WATT, 10%, UNLESS OTHERWISE SPECIFIED.

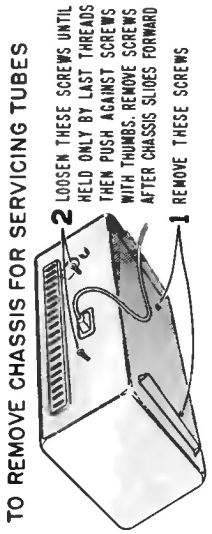

Rear View of Cabinet Showing Chassis Mounting Screws.

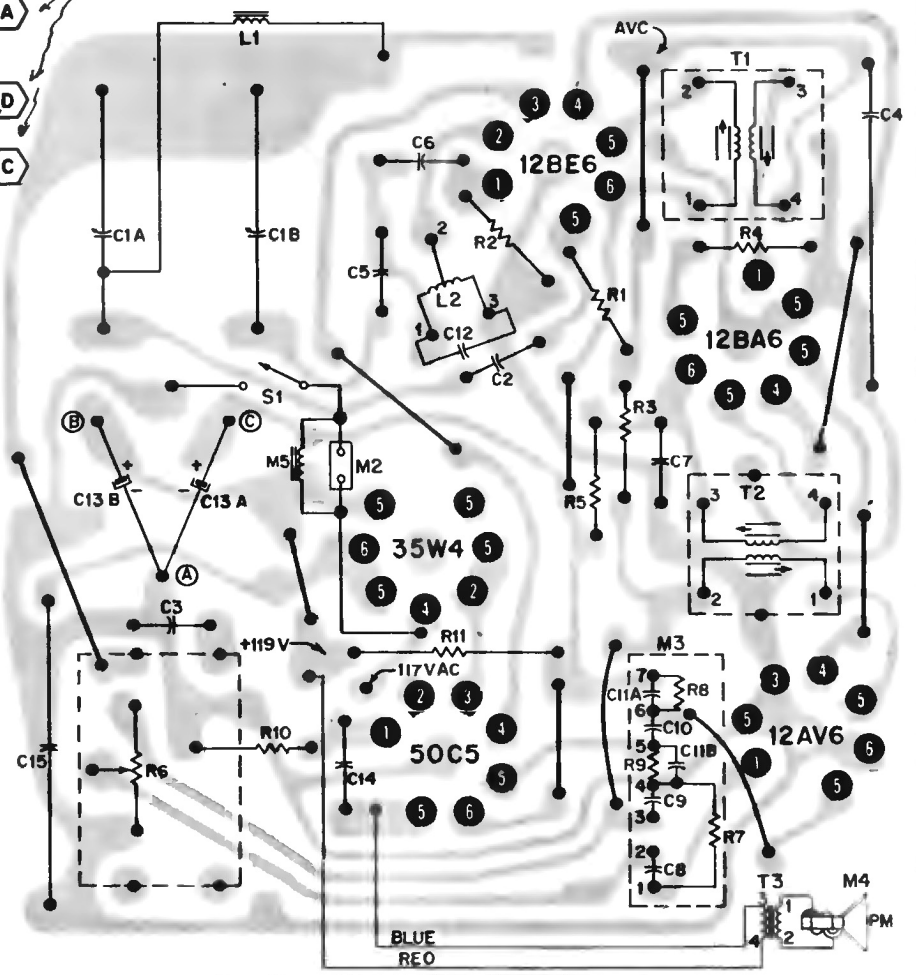

Rear View of Etched Circuit Board. Gray area represents etched wiring; black symbols and lines represent components and connections on opposite side.