ADMIRAL

CHASSIS 5T5 // - Y3058
MODELS Y3051 - Y3053

TO REMOVE CHASSIS

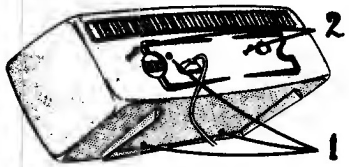

1 REMOVE THESE SCREWS

2 LOOSEN THESE SCREWS UNTIL HELD ONLY BY LAST THREADS THEN PUSH AGAINST SCREWS WITH THUMBS. REMOVE SCREWS AFTER CHASSIS SLIDES FORWARD

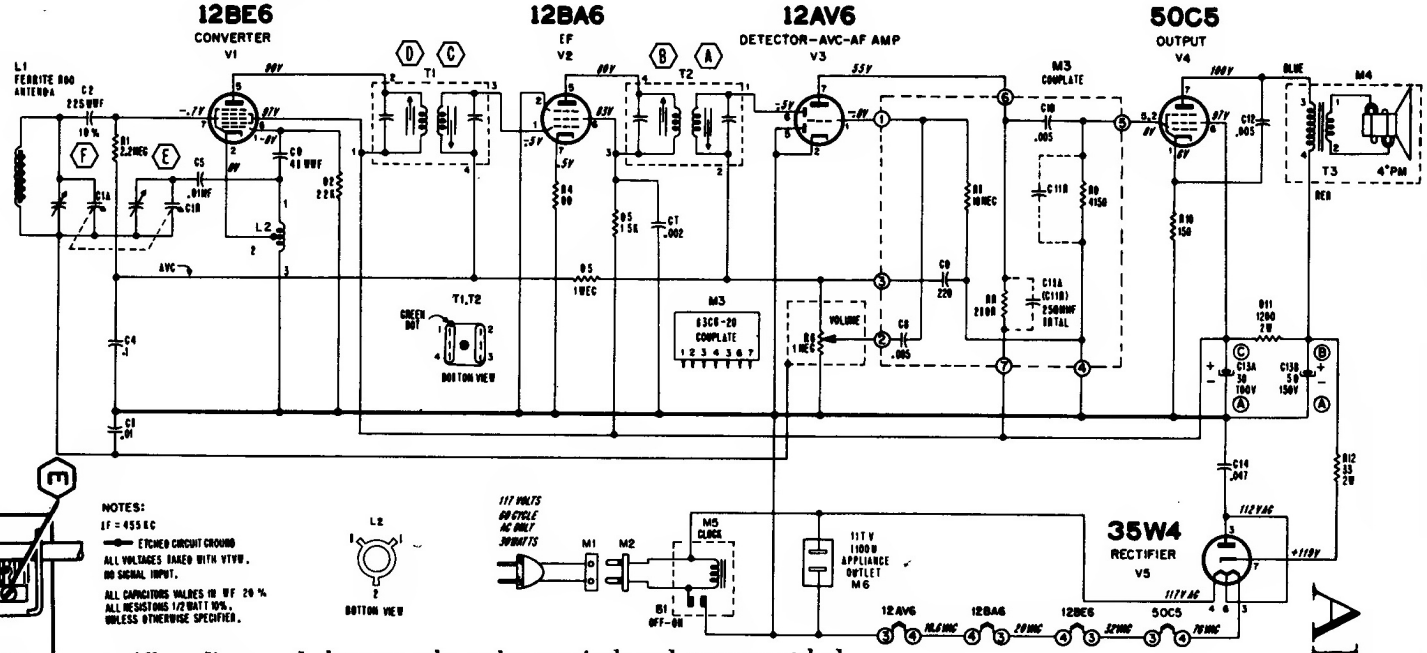

NOTES:
IF = 455 KC
ETCHED CIRCUIT GROUND
ALL VOLTAGES TAKEN WITH VTVM.
NO SIGNAL INPUT.
ALL CAPACITORS VALUES IN MF 20 %
ALL RESISTORS 1/2 WATT 10%,
UNLESS OTHERWISE SPECIFIED.

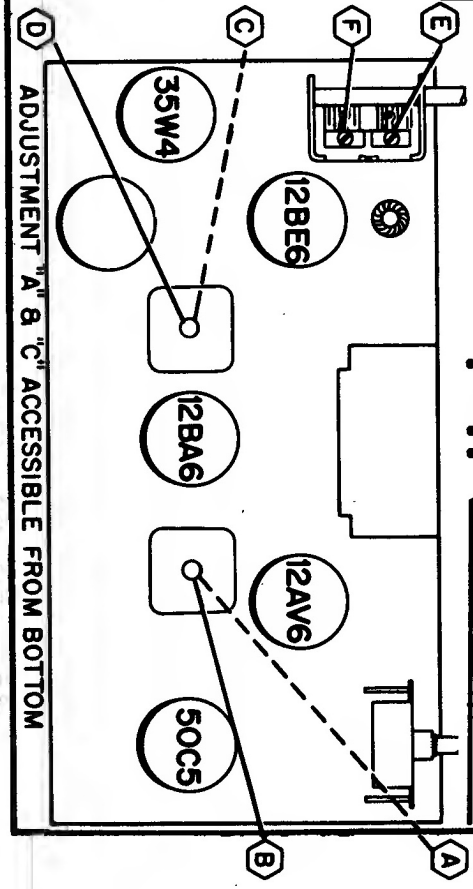

Top View of Chassis Showing Tube and Alignment Point Locations.

- All readings made between tube socket terminals and common etched circuit ground.
- Dial turned to low frequency end; volume control at minimum.
- All voltages measured with vacuum-tube voltmeter, on 117 Volts AC line.

ALIGNMENT PROCEDURE

- Use an isolation transformer if available; otherwise, connect a .1 mfd. capacitor in series with low side of signal generator and connect to common ground.
- Set volume control full on.
- Disconnect voice coil leads and connect output meter across output secondary. Use a 3.2 ohm load.
- Use lowest setting of signal generator capable of producing adequate indication on lowest scale of output meter.
- Use a non-metallic alignment tool with a blade 3/32" wide for aligning IF transformers.
- Repeat adjustments to insure good results.

STEP	CONNECTION OF SIGNAL GENERATOR	SIGNAL GENERATOR FREQUENCY	RECEIVER GANG SETTING	ADJUSTMENTS
1	Through a .1 mf capacitor to stator, Antenna section of gang tuning capacitor	455 KC	Gang fully open	"A", "B", "C" and "D" for maximum output
2	Same as "STEP 1"	1620 KC	Gang fully open	"E" for maximum output
3	Use a radiated signal. Loop of several turns of wire, or place generator lead close to ferrite antenna for adequate signal pickup.	1400 KC	Tune in on generator signal	"F" for maximum output