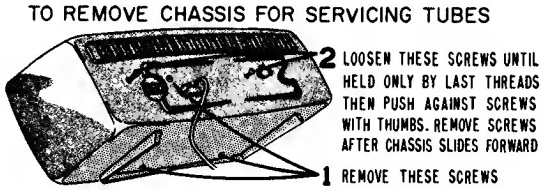

Figure 2. Rear View of Cabinet Showing Chassis Mounting Screws.

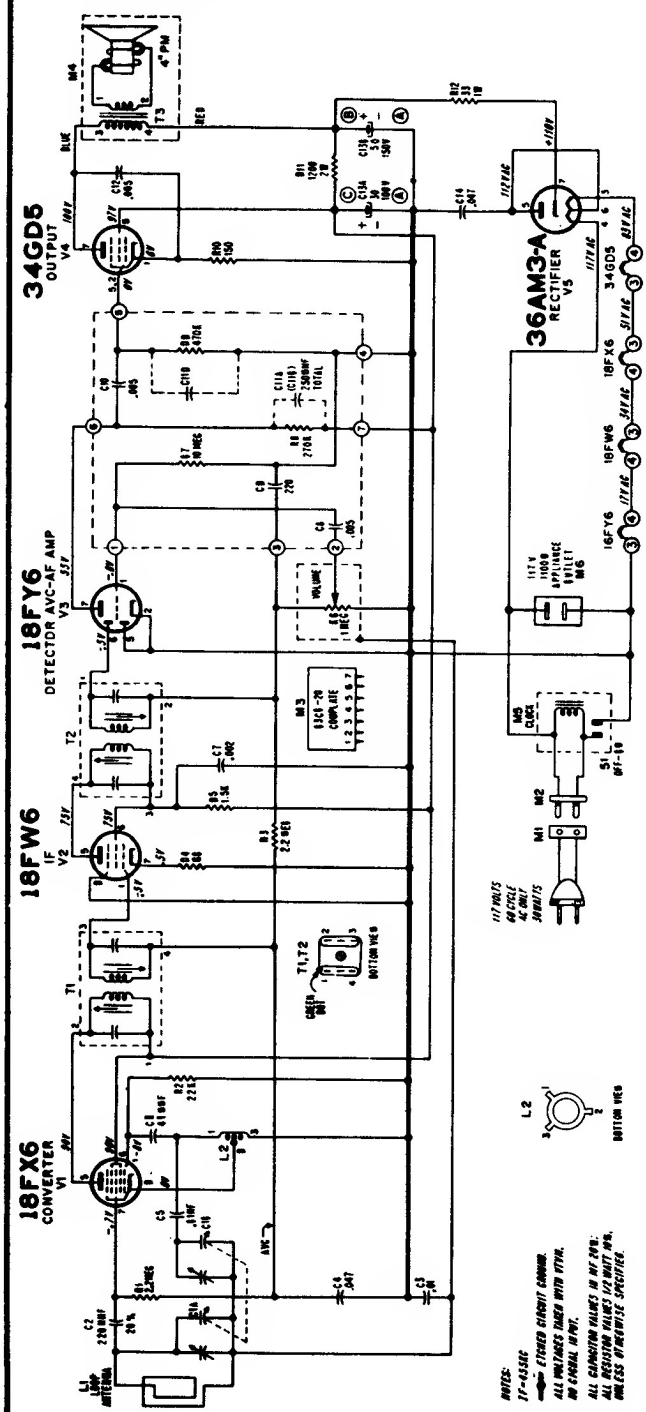

ADMIRAL

CHASSIS 5F6
MODELS Y3051A-Y3053A Y3058A

CHASSIS REMOVAL

1. Tilt cabinet forward and remove the two screws located on the bottom of cabinet. Also remove the center screw on the back. (The one just above the line cord socket.) See Figure 2.
2. Loosen the two screws remaining at the back until held only by their last threads. Apply enough pressure to these loosened screws with the thumbs, to break the AC interlock Connection inside the cabinet.
3. Remove screws completely and allow chassis, with attached front panel, to slide forward. Make certain that the Time Set Knob at the rear clears the hole provided in the cabinet back.

REMOVING THE CLOCK

1. Remove the cabinet (rear section) as instructed under Chassis Removal.
2. Remove the two knobs from the front and the four pushbuttons by pulling them straight off.
3. Remove the front crystal by pushing inward and then outward on the tabs located along the top and bottom edges. Remove the tuning and volume indicator discs.
4. Remove screw under tuning dial indicator.
5. Remove two screws holding volume control to cabinet front.
6. Remove two screws holding antenna brackets to cabinet front.
7. Remove the two nuts mounting the clock to the front panel. The clock is removable through front, after unsoldering leads.

GENERAL

When the radio is "off," pushing the SLEEP button will cause the radio to play from 10 minutes up to an hour depending upon the number of times the knob is pushed; once for 10 minutes, twice for 30 minutes, 3 times for 45 minutes and 4 times for 1 hour. The fifth time is a neutral position that cancels any previous setting.

"SNOOZE ALARM"—When the buzzer alarm starts, it is possible to catch 40 winks more sleep by simply pushing down the SLEEP button. The buzzer will then be silent for a period of approximately 10 minutes for one push of the button, 30 minutes for two, 45 minutes for three, 60 minutes for four. *Note*: The fifth push is a neutral position which cancels the previous setting and turns the buzzer back "on".