ADMIRAL

CHASSIS: 4X3, 4X3A
MODELS: Y3303, Y3308, Y3309, Y3337, Y3443

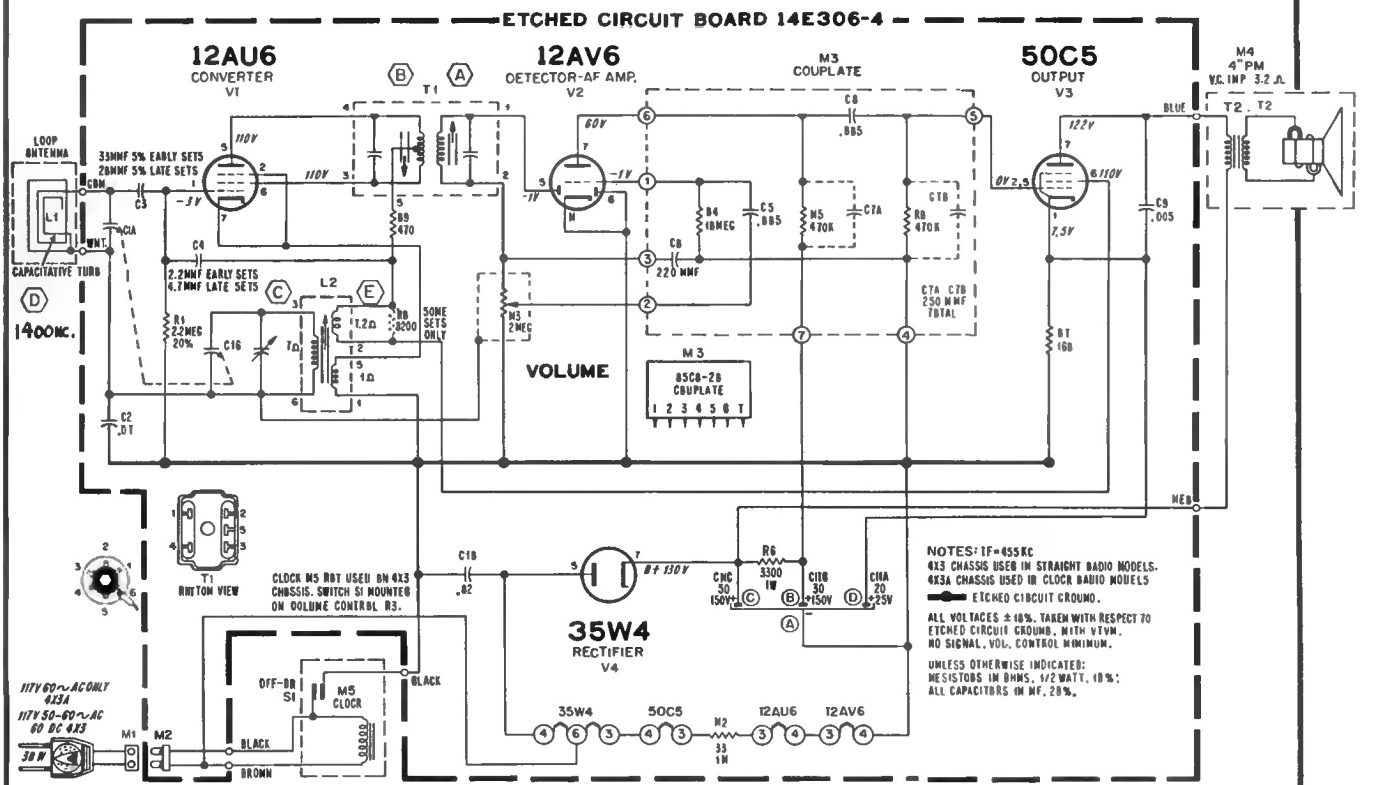

CHASSIS REMOVAL

1. Pull knob off and remove screw under tuning knob.
2. Carefully pry up top of cabinet at back with finger tips, enough to allow removal of cabinet back.
3. Remove screw holding volume control to cabinet front.
4. Remove plastic support from back of chassis and slip chassis assembly out.

WARNING! DO NOT CONNECT AN EARTH GROUND WIRE TO THIS RECEIVER.

The chassis of this receiver is connected directly to one side of the power line. To prevent damage to test equipment or to etched wiring, do not place chassis directly on a metal bench or other metal object.

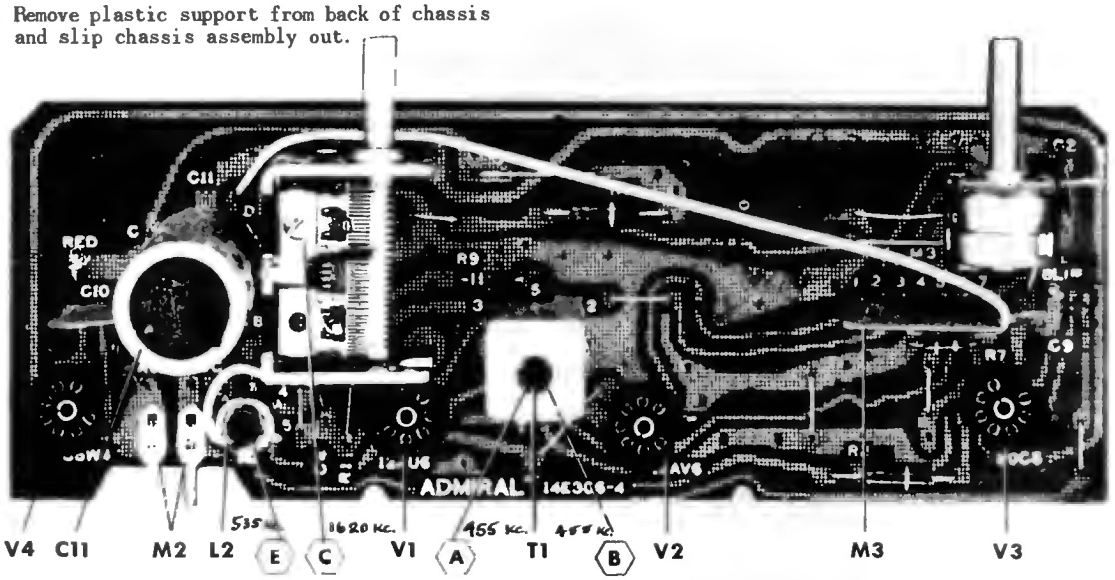

TOP VIEW OF CHASSIS (4X3) SHOWING COMPONENTS AND ALIGNMENT POINTS