ADMIRAL

Chassis 5D6A, 5D6B, 5D6C,

Models Y3321, Y3323, Y3346, Y3353, Y3354, Y3359, Y3363, Y3364, Y3368, Y3376, Y3377, Y3379, Y3381, Y3383.

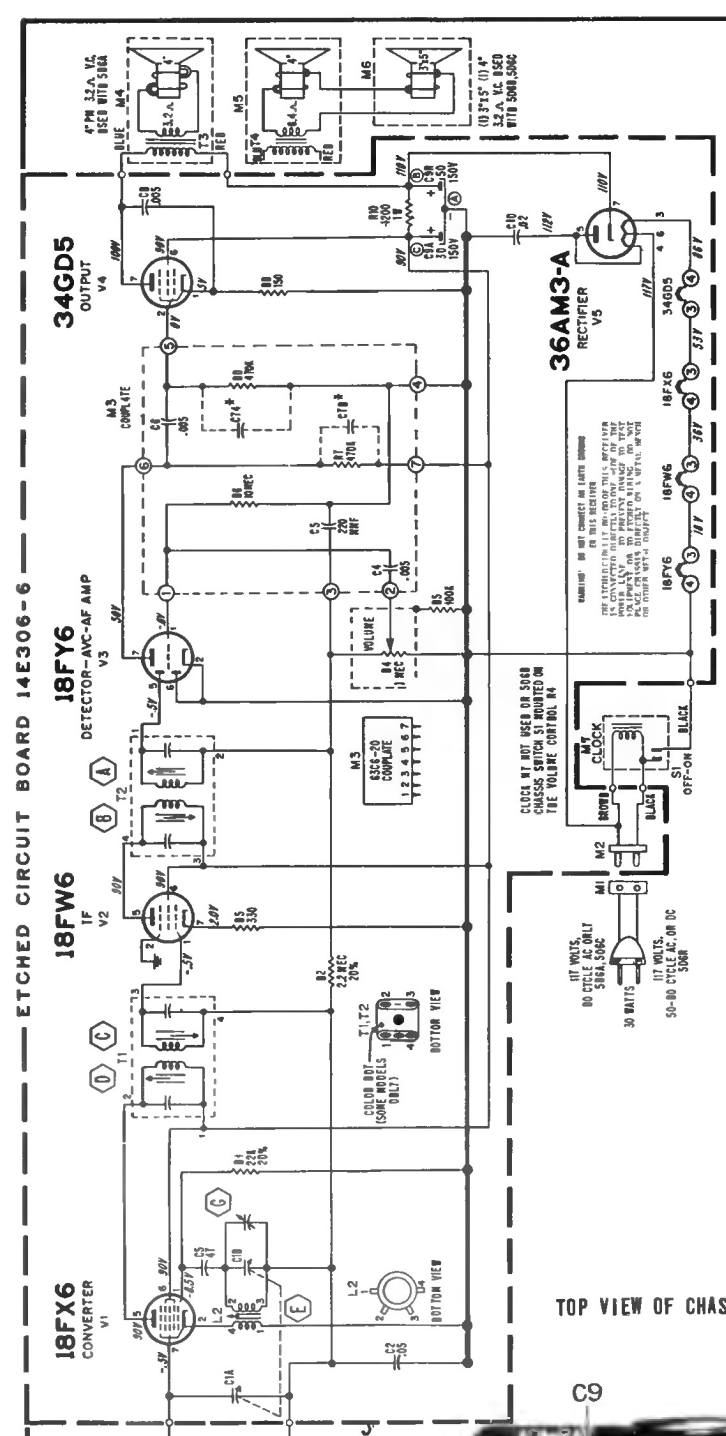

DIAL STRINGING DIAGRAM - 5D6B CHASSIS

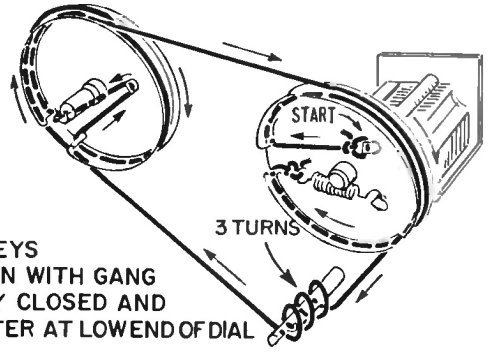

PULLEYS SHOWN WITH GANG FULLY CLOSED AND POINTER AT LOWEND OF DIAL

DIAL STRINGING DIAGRAM - 5D6C CHASSIS

PULLEY SHOWN WITH TUNING CAPACITOR FULLY CLOSED AND POINTER AT LOW END OF DIAL.

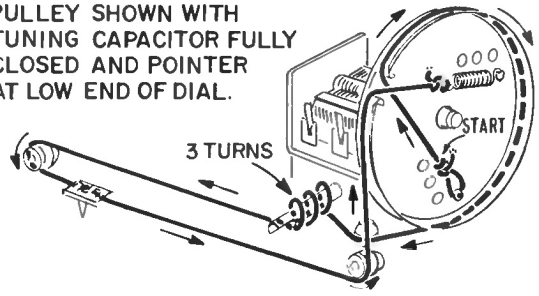
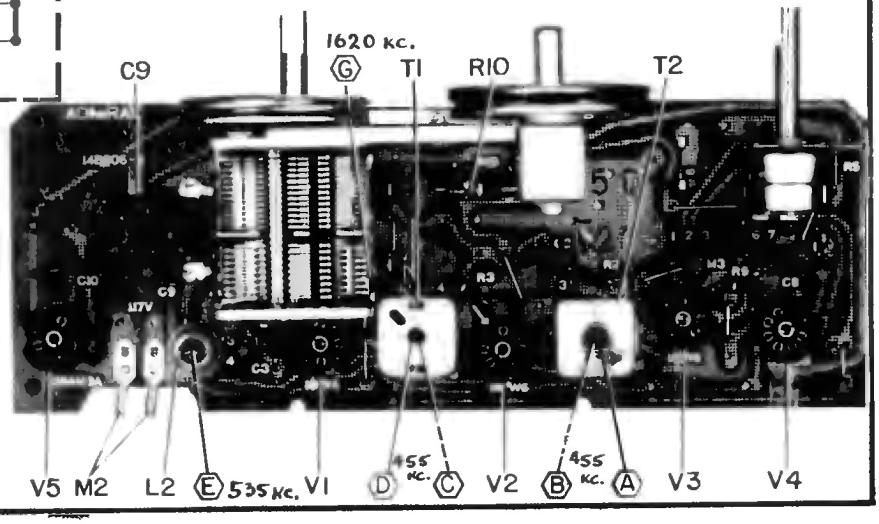
TOP VIEW OF CHASSIS (5D6B) SHOWING COMPONENTS AND ALIGNMENT POINTS