ADMIRAL

CHASSIS 3N1A, MODELS Y4049, Y4071, Y4072, Y4073

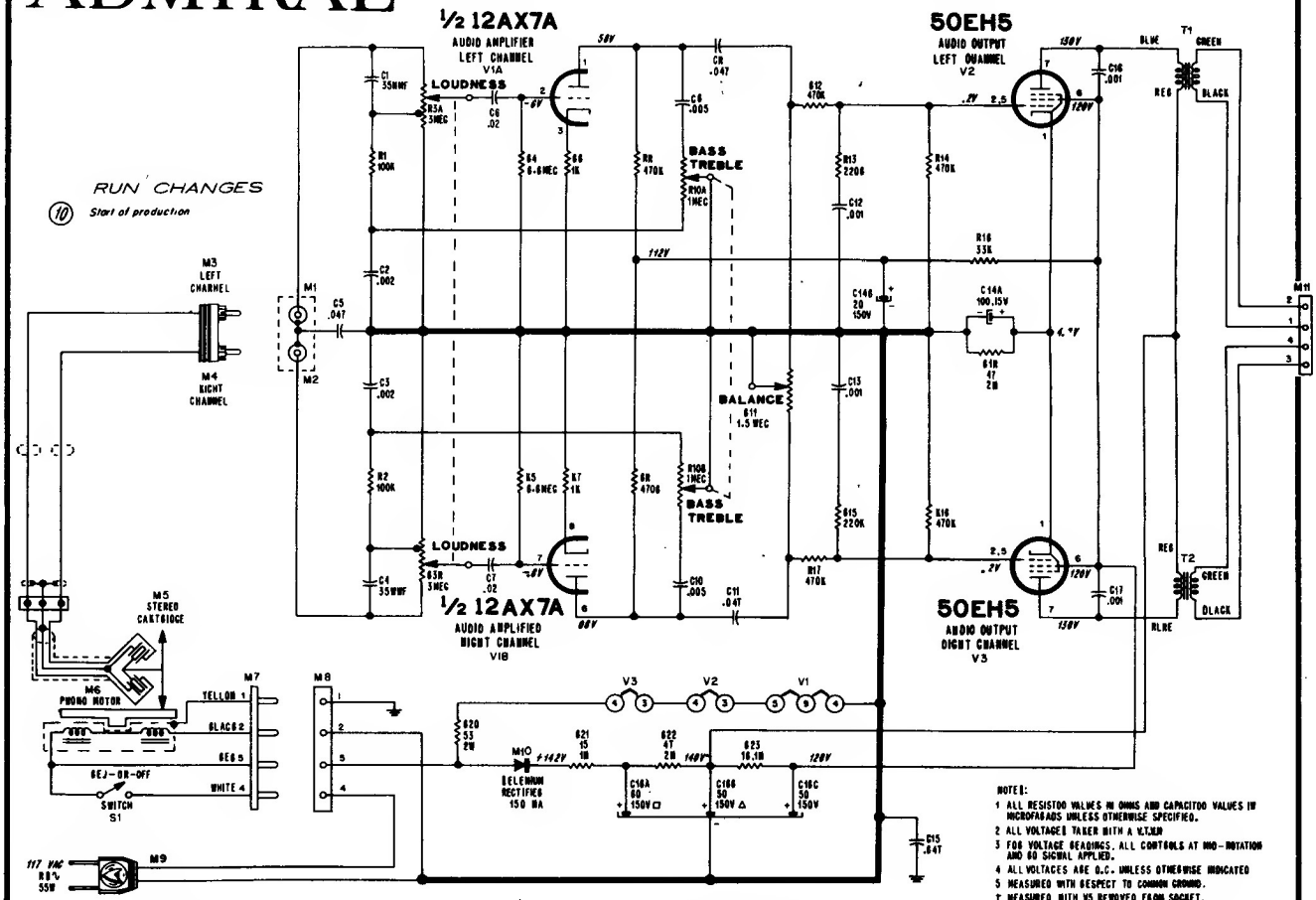

Schematic of 3N1A Stereophonic High Fidelity Amplifier Stamped Run 10.

RUN 11 In All Sets
To improve performance (tonal quality) at low volume level, resistors R1 and R2 were changed from 100,000 ohms to one megohm, one-half-watt.

CHASSIS REMOVAL

Model Y4049: Remove the metal grille by removing the screws along the top and side of the grille.

Disconnect the phono motor plug (M7), the two channel input plugs (M3 and M4), and speaker plug (M12). Remove the three control knobs by pulling them straight out from the control shafts.

Remove the screws holding the phono motor board. Lift the board with the record changer out of cabinet. To avoid marring the cabinet or damaging the record changer, do not allow the bottom of the record changer to scrape across the cabinet when removing.

Remove the four nuts holding the chassis to the cabinet. Remove chassis from cabinet.

Models Y4071, Y4072 and Y4073: Disconnect the phono motor plug (M7), the two channel input plugs (M3 and M4), and speaker plug (M12). Remove the three control knobs by pulling them straight out from the control shafts.
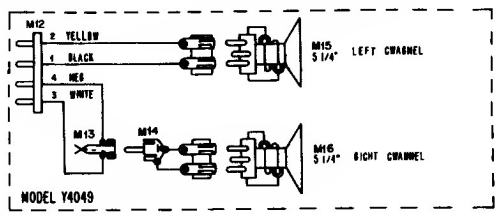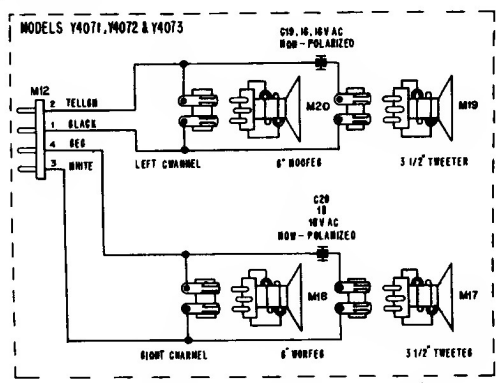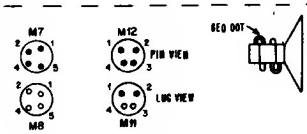
Remove the four nuts holding the chassis to the cabinet. Remove chassis from cabinet.