Admiral

Chassis 10A2, Model YH321

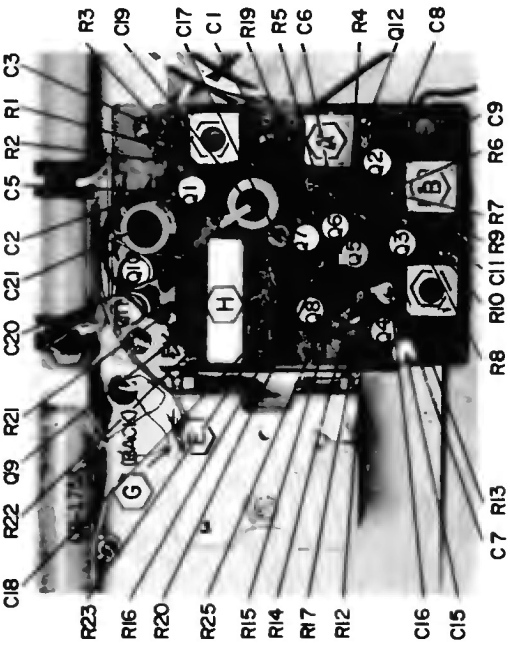

COMPONENT & ALIGNMENT LOCATIONS, TOP VIEW

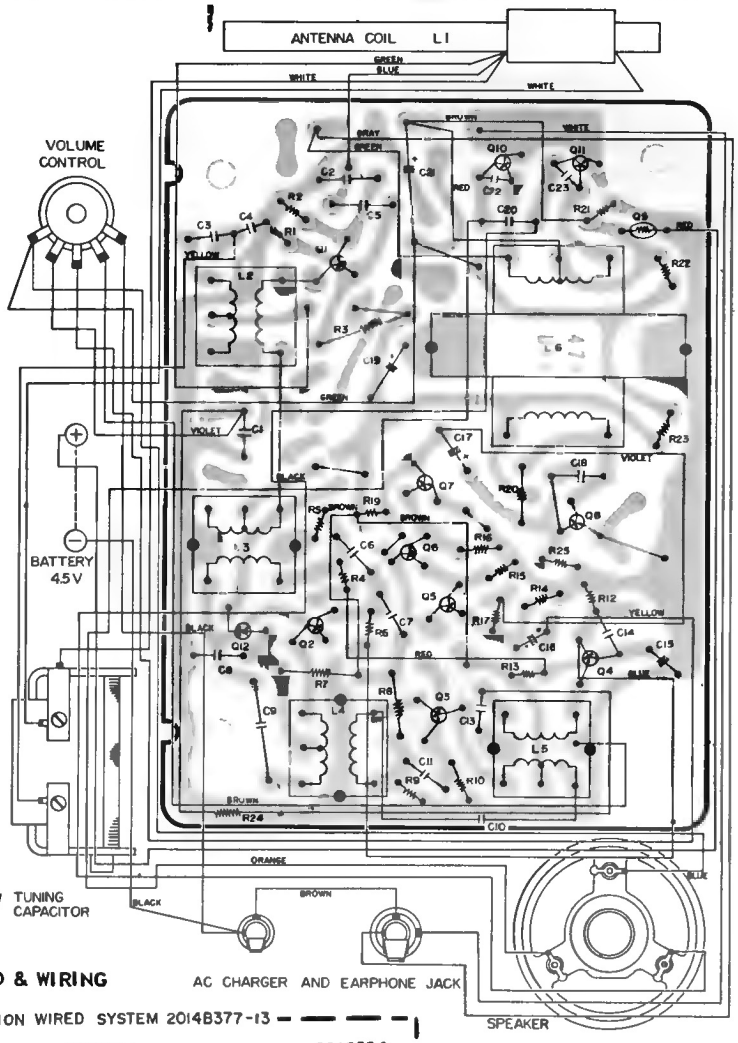
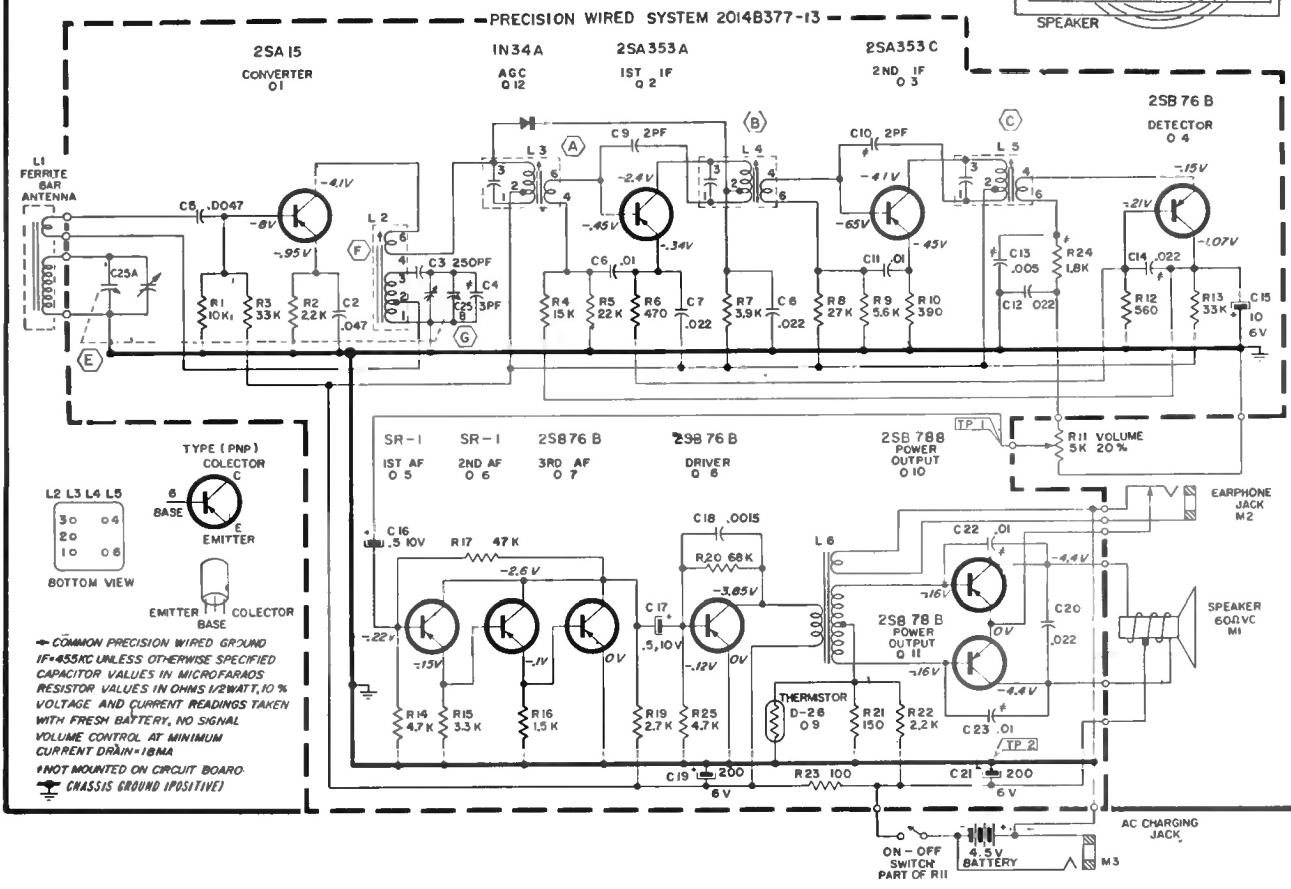
COMPONENT CONNECTIONS TO BACK OF BOARD & WIRING