ARVIN RADIO MODELS 10R16 10R18 CODE 1.42202

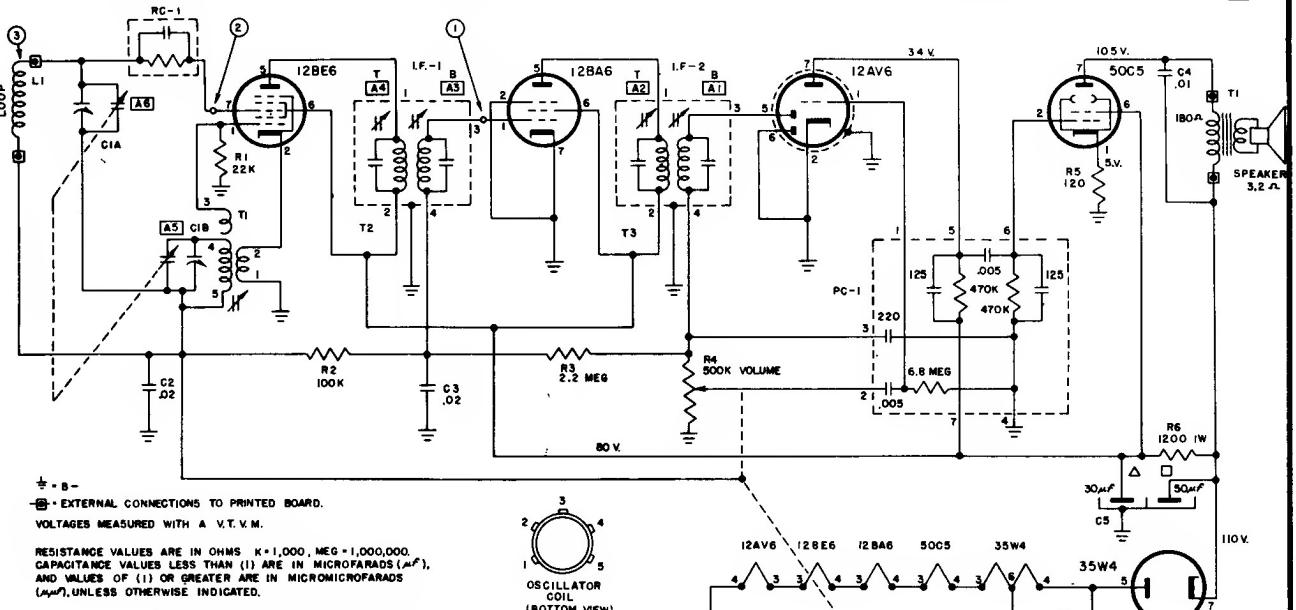

- B -

EXTERNAL CONNECTIONS TO PRINTED BOARD.

VOLTAGES MEASURED WITH A V.T.V.M.

RESISTANCE VALUES ARE IN OHMS K = 1,000, MEG = 1,000,000. CAPACITANCE VALUES LESS THAN (1) ARE IN MICROFARADS (μf), AND VALUES OF (1) OR GREATER ARE IN MICROMICROFARADS (μμf), UNLESS OTHERWISE INDICATED.

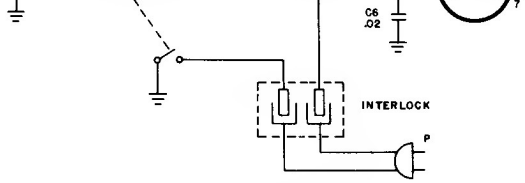

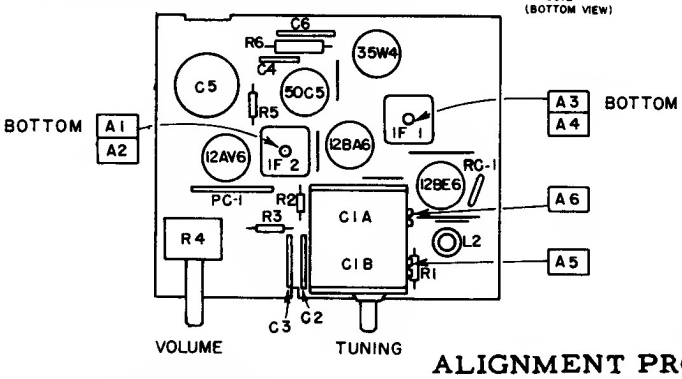

APPROXIMATE SENSITIVITIES

CIRCUIT POINT	DUMMY TO GENERATOR	INPUT FOR .05 WATT OUTPUT (0.4 VOLTS ACROSS V.C.)	INPUT FOR .5 WATT OUTPUT (1.26 VOLTS ACROSS V.C.)
1	.05μf AT 455 KC	2000 μV	5000 μV
2	.05μf AT 455 KC	60	150
3	STANDARD LOOP AT 1000 KC	200 μV / M	500 μV / M

ALIGNMENT PROCEDURE

PRELIMINARY:

Output meter connection ..... Across speaker voice coil
Output meter reading to indicate 500 milliwatts (standard output)... 1.26 volts
Connection of generator ground lead ..... Floating ground
Generator modulation ..... 30% 400 cycles
Position of Volume Control ..... Fully clockwise

Position of Variable	Frequency of Generator	Dummy Antenna	Generator Output Connection	Trimmers Adjusted in Order Shown for Maximum Output	Function of Trimmer
Open	455 Kc	.05 μ fd	Pin 7 12BE6	A1, A2, A3, A4	I.F.
Open	1670 Kc		* Test Loop	A5	Oscillator
1400	1400 Kc		* Test Loop	A6	Antenna
1000	1000 Kc		* Test Loop	Fan C1A Plates	
600	600 Kc		* Test Loop	Fan C1A Plates	

* Standard Hazeltine Test Loop Model 1150 or 3 turns of wire about 6" in diameter placed about one foot from the set loop.

The alignment procedure should be repeated in the original order for greatest accuracy. Always keep the output from the signal generator at its lowest possible value to make the AVC action of the receiver ineffective.