Arvin
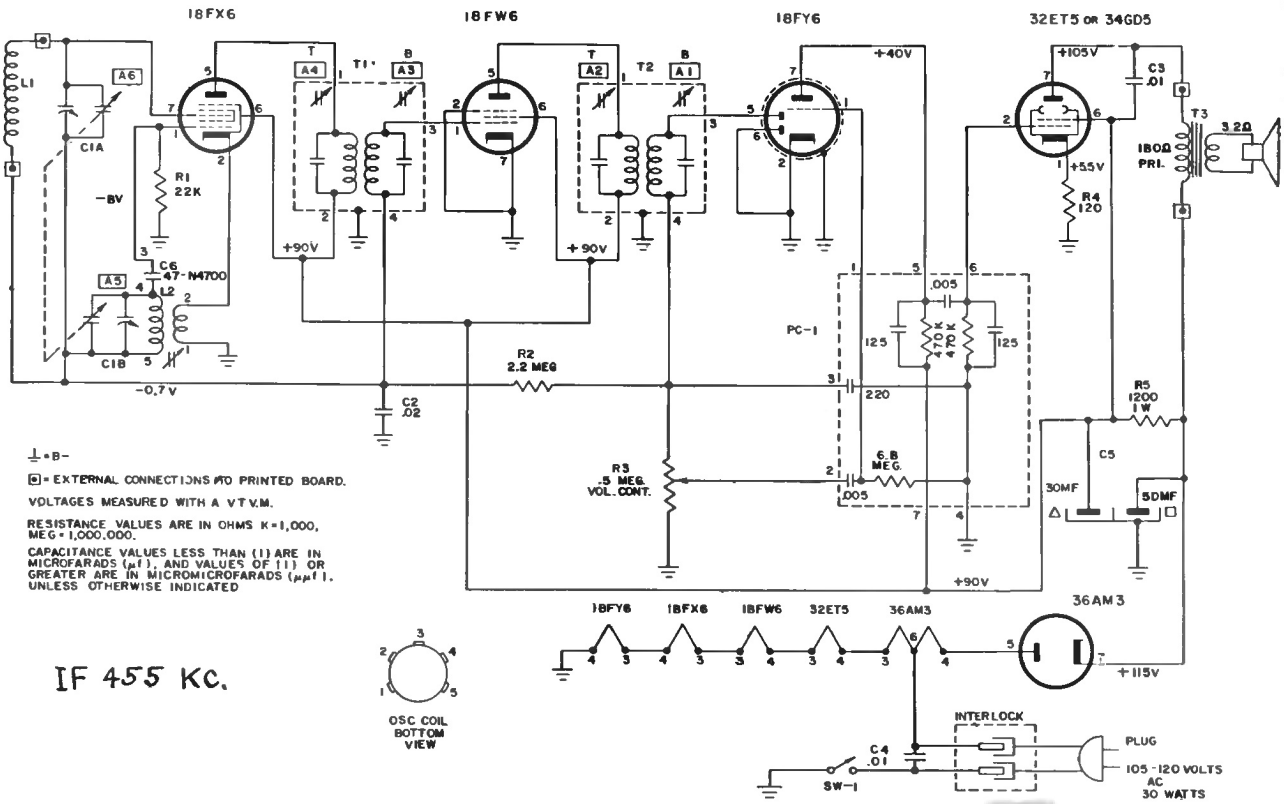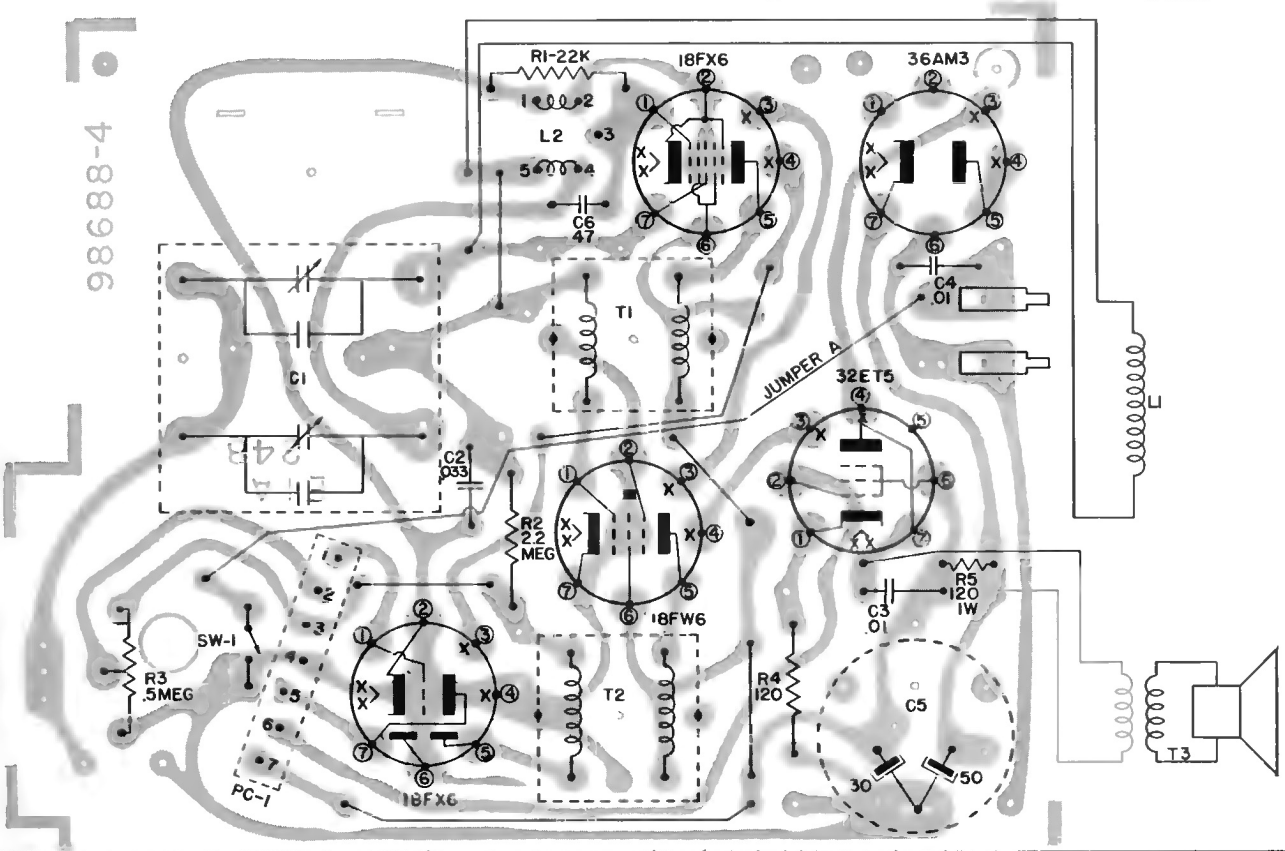
MODELS 13R07, 13R08
CODE 1.86401