Arvin

Models 53R05, 53R07, Code 1.74401, Models 53R17, 53R19, Code 1.75401, Models 53R27, 53R28, Code 1.76001, and electrically similar Models 13R35, 13R37, Code 1.74501, which use dual speakers and are less clock.

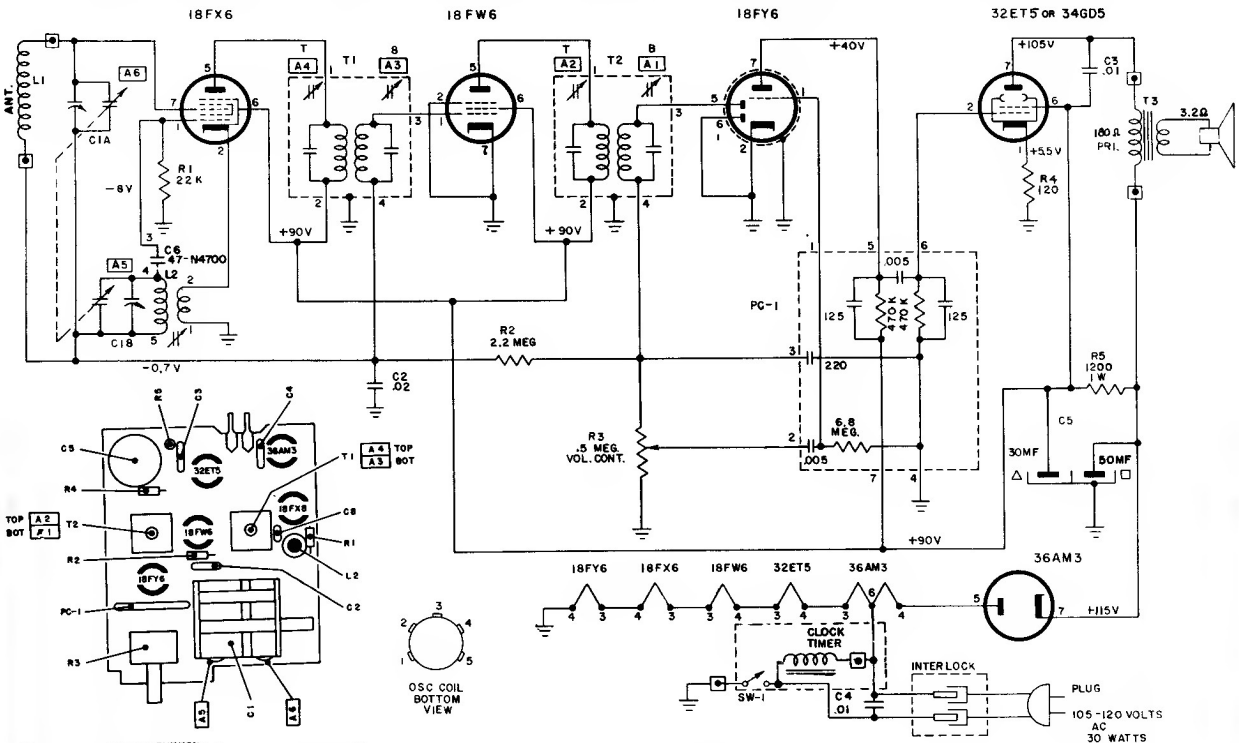

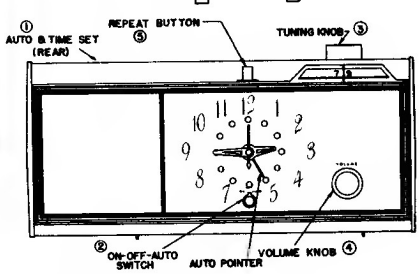

ON-OFF-AUTO SWITCH

The small knob (2) below clock face operates a three position switch. When the knob is turned to the center position the radio will be turned off. With this knob in the left position, the radio receiver is turned on. After allowing about 30 seconds for "warm-up", the radio receiver will be in operation if the TUNING (3) and the VOLUME (4) CONTROLS have been properly adjusted. When this (2) knob is turned to the right position, the radio will be turned on automatically when the hands of the clock indicate the time for which the AUTO POINTER is set.

⏚ = -8-

▣ = EXTERNAL CONNECTIONS TO PRINTED BOARD.

VOLTAGES MEASURED WITH A V.T.V.M.

RESISTANCE VALUES ARE IN OHMS K=1,000, MEG.=1,000,000.

CAPACITANCE VALUES LESS THAN (1) ARE IN MICROFARADS (μf), AND VALUES OF (1) OR GREATER ARE IN MICROMICROFARADS (μμf), UNLESS OTHERWISE INDICATED.

ALIGNMENT PROCEDURE

PRELIMINARY:

Output meter connection ..... Across speaker voice coil
Output meter reading to indicate 500 milliwatts (standard output) ..... 1.0 volts
Connection of generator ground lead ..... Floating ground
Generator modulation ..... 30% 400 cycles

Position of Variable	Frequency of Generator	Dummy Antenna	Generator Output Connection	Trimmers Adjusted in Order Shown for Maximum Output	Function of Trimmer
Open	455 Kc	.05 μ fd	Pin 7 18FX6	A1, A2, A3, A4	I.F.
Open	1670 Kc		* Test Loop	A5	Oscillator
1400	1400 Kc		* Test Loop	A6	Antenna
1000	1000 Kc		* Test Loop	Fan C1A Plates	
600	600 Kc		* Test Loop	Fan C1A Plates	

* Standard Hazeltine Test Loop Model 1150 or 3 turns of wire about 6" in diameter placed about one foot from the set loop.

The alignment procedure should be repeated in the original order for greatest accuracy. Always keep the output from the signal generator at its lowest possible value to make the AVC action of the receiver ineffective.