ARVIN Industries

Model 5583, Chassis 1.44200

Model 2584, Chassis 1.44100

differs from this material by not using a clock timer and in employing two speakers.

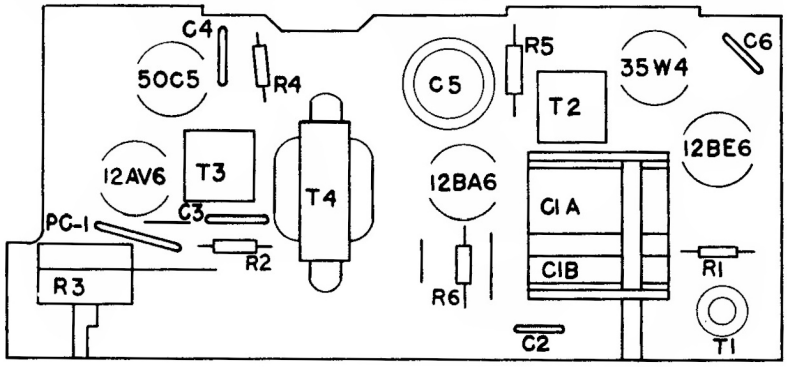

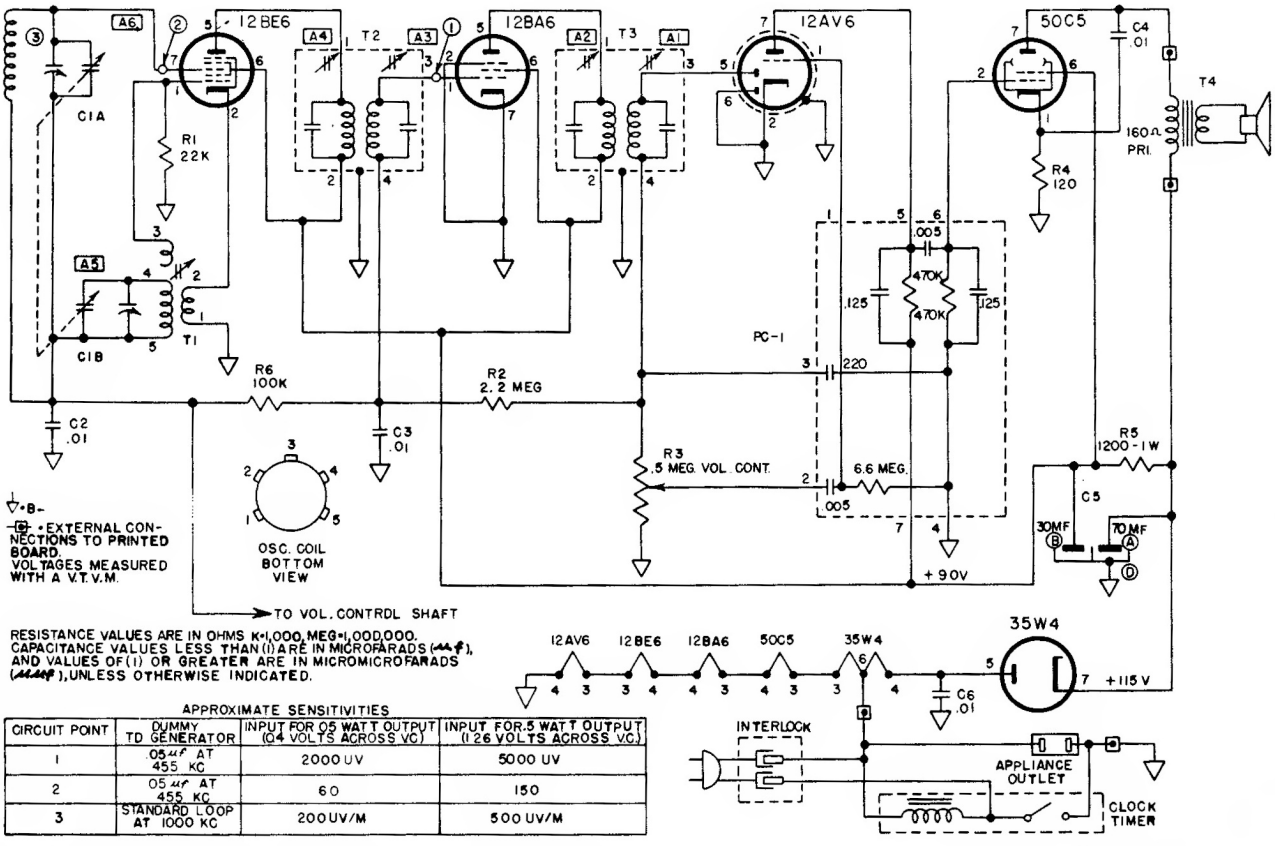

RESISTANCE VALUES ARE IN OHMS K=1,000, MEG=1,000,000. CAPACITANCE VALUES LESS THAN (1) ARE IN MICROFARADS (μf), AND VALUES OF (1) OR GREATER ARE IN MICROMICROFARADS (μμf), UNLESS OTHERWISE INDICATED.

APPROXIMATE SENSITIVITIES

CIRCUIT POINT	DUMMY TO GENERATOR	INPUT FOR .05 WATT OUTPUT (.04 VOLTS ACROSS VC)	INPUT FOR .5 WATT OUTPUT (1.26 VOLTS ACROSS VC)
1	.05 μf AT 455 KC	2000 UV	5000 UV
2	.05 μf AT 455 KC	60	150
3	STANDARD LOOP AT 1000 KC	200 UV/M	500 UV/M

ALIGNMENT PROCEDURE Output meter connection Across speaker voice coil
Output meter reading to indicate 500 milliwatts (standard output)... 1.26 volts
Connection of generator ground lead ..... Floating ground
Generator modulation ..... 30% 400 cycles

Position of Variable	Frequency of Generator	Dummy Antenna	Generator Output Connection	Trimmers Adjusted in Order Shown for Maximum Output	Function of Trimmer
Open	455 Kc	.05 μ fd	Pin 7 12BE6	A1, A2, A3, A4	I.F.
Open	1670 Kc		* Test Loop	A5	Oscillator
1400	1400 Kc		* Test Loop	A6	Antenna
1000	1000 Kc		* Test Loop	Fan C1A Plates	
600	600 Kc		* Test Loop	Fan C1A Plates	

* Standard Hazeltine Test Loop Model 1150 or 3 turns of wire about 6" in diameter placed about one foot from the set loop.