ARVIN Industries

Model 3588

Chassis 1.45200

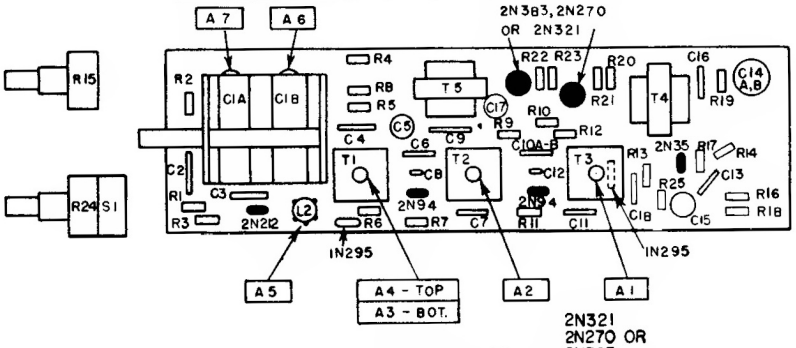

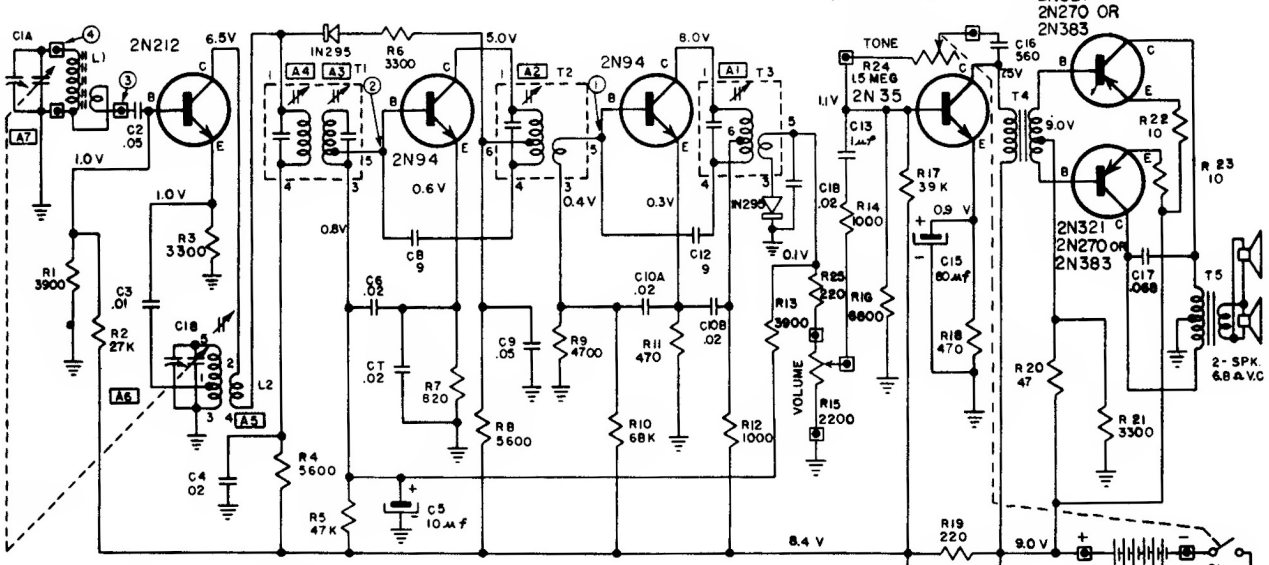

RESISTANCE VALUES ARE IN OHMS; K = 1000.

CAPACITANCE VALUES LESS THAN 1.0 ARE IN MICROFARADS (mf) AND VALUES GREATER THAN 1.0 ARE IN MICRO-MICROFARADS (μμf) EXCEPT WHERE NOTED.

VOLTAGE READINGS TO COMMON GROUND ARE MEASURED WITH VACUUM TUBE VOLTMETER UNDER NO SIGNAL CONDITIONS WITH TUNING CAPACITOR CLOSED AND VOLUME CONTROL AT MAXIMUM CLOCKWISE ROTATION.

SIGNAL TEST POINT	TEST FREQUENCY	SERIES CAPACITOR TO GENERATOR	INPUT FOR .05 WATT OUTPUT (0.4 V ACROSS 3.2Ω)
①	455 KC	.05 mf	2000 μV
②	455 KC	.05 mf	65 μV
③	455 KC	.05 mf	5 μV
④	1000	STANDARD LOOP	150 μV/M

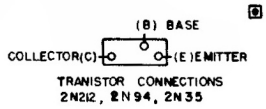

TRANISTOR CONNECTIONS 2N212, 2N94, 2N35

COMMON GROUND SYMBOL

EXTERNAL CONNECTION TO PRINTED CIRCUIT.

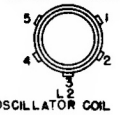

OSCILLATOR COIL

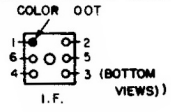

I.F. TRANSFORMER

ALIGNMENT PROCEDURE

Output meter reading to indicate 50 milliwatts 0.4V

Output meter connection..... Across speaker voice coil

Connection of generator ground lead..... Common Ground

Generator Modulation..... 30% 400 cycles

Position of volume control..... Fully clockwise

Position of Variable	Generator Frequency	Dummy Antenna	Generator Connections	Trimmers Adj. in order shown for Max. Output	Function of Trimmer
Open	455 Kc	.05 μf	C1A	A1 (Top of T3)	I. F.
				A2 (Top of T2)	I. F.
				A3(Bottom of T1)	I. F.
				A4 (Top of T1)	I. F.
Open	1670 Kc		*Test Loop	A6	Oscillator
1400 Kc	1400 Kc		*Test Loop	A7	Antenna
600 Kc	600 Kc		*Test Loop	Check Point	

*Standard Hazeltine Test Loop Model 1150 or 3 turns of wire about 6" in diameter placed about one foot from the set loop.