Arvin MODELS 60R23 60R28 60R29 CHASSIS 1.49201

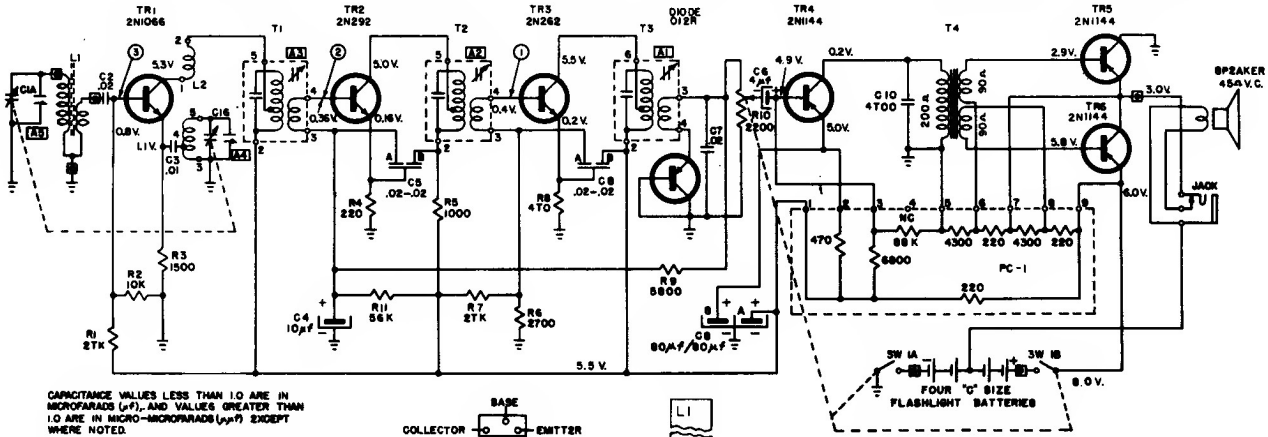

CAPACITANCE VALUES LESS THAN 1.0 ARE IN MICROFARADS (μf), AND VALUES GREATER THAN 1.0 ARE IN MICRO-MICROFARADS (μμf) EXCEPT WHERE NOTED.

VOLTAGE READINGS TO COMMON GROUND ARE MEASURED WITH VACUUM TUBE VOLTMETER UNDER NO SIGNAL CONDITIONS WITH TUNING CAPACITOR CLOSED AND VOLUME CONTROL AT MAXIMUM CLOCKWISE ROTATION.

RESISTANCE VALUES ARE IN OHMS, K=1000.

⏚ - COMMON GROUND SYMBOL.

[G] - EXTERNAL CONNECTION TO PRINTED CIRCUIT. TOTAL BATTERY CURRENT DRAIN UNDER NO SIGNAL CONDITIONS, 5 TO 8 MA.

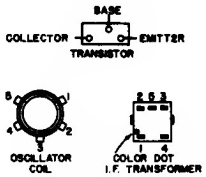

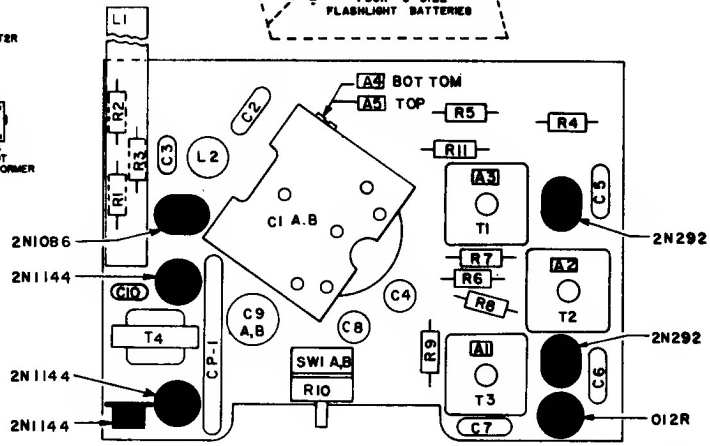

I. F. 455 KC.

SIGNAL TEST POINTS	TEST FREQUENCY	SERIES CAPACITOR TO GENERATOR	INPUT FOR 5MW OUTPUT (4TV ACROSS 4Ω)
①	455 KC	.05μf	2000μV
②	455 KC	.05μf	110μV
③	455 KC	.05μf	4μV
④	1000 KC	STANDARD LOOP	300μV M