Arvin MODEL 60R58 CHASSIS 1.50300

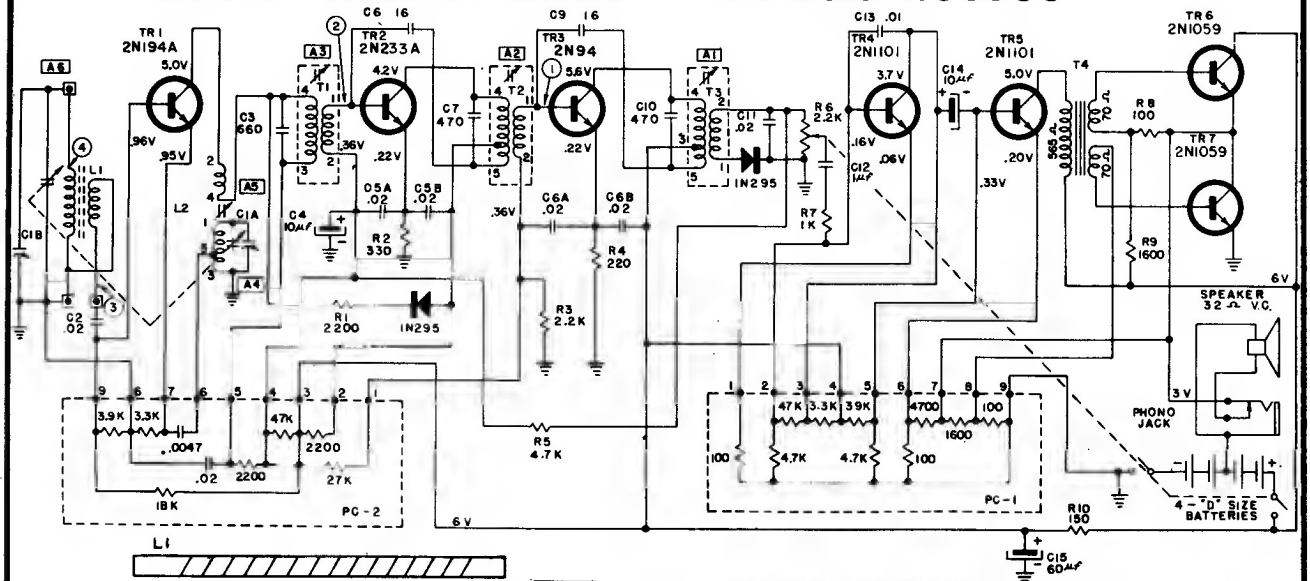

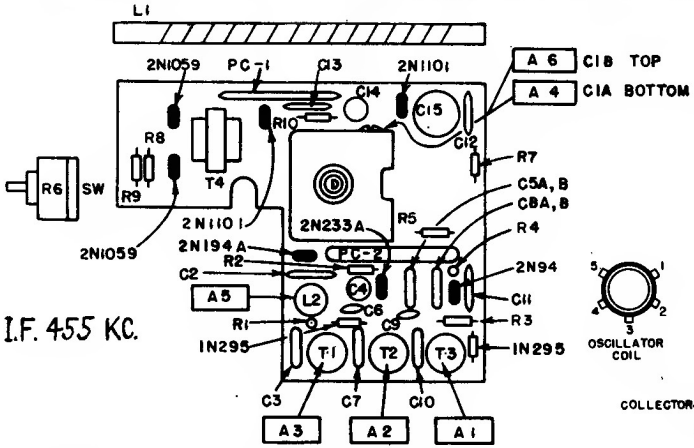

RESISTANCE VALUES ARE IN OHMS; K=1000.

CAPACITANCE VALUES LESS THAN 1.0 ARE IN MICROFARADS (µf), & VALUES GREATER THAN 1.0 ARE IN MICRO-MICROFARADS (µµf) EXCEPT WHERE NOTED.

VOLTAGE READINGS TO COMMON GROUND ARE MEASURED WITH VACUUM TUBE VOLTMETER UNDER NO SIGNAL CONDITIONS WITH TUNING CAPACITOR CLOSED & VOLUME CONTROL AT MAXIMUM CLOCKWISE ROTATION.

⏚ = COMMON GROUND SYMBOL.

⊡ = EXTERNAL CONNECTION TO PRINTED CIRCUIT.

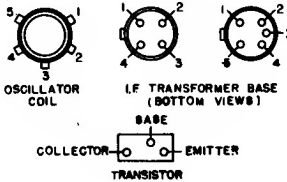

SIGNAL TEST POINT	TEST FREQUENCY	SERIES CAPACITOR TO GENERATOR	INPUT FOR 50 M W OUTPUT (1.26 V. ACROSS 32 Ω)
1	455 KC	.05 µf	900 µV
2	455 KC	.05 µf	30 µV
3	455 KC	.05 µf	5 µV
4	1000 KC	STANDARD LOOP	200 µV/M