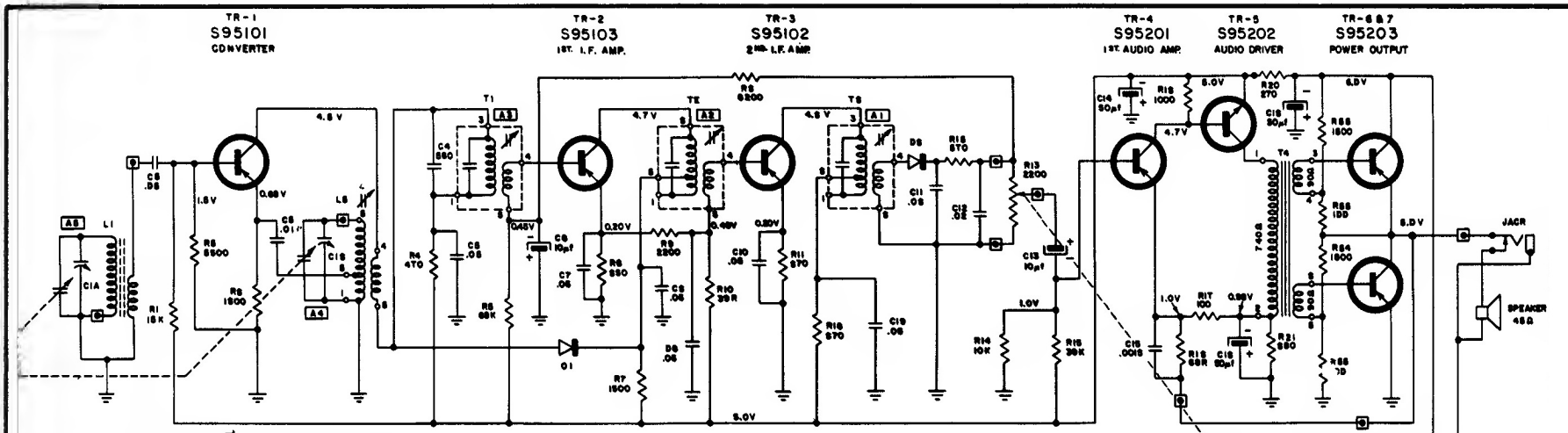

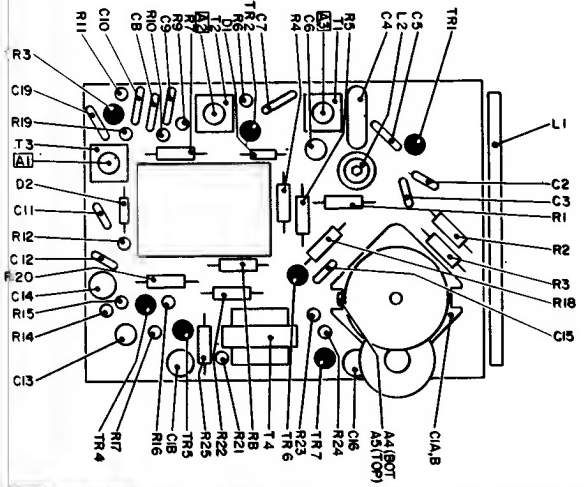

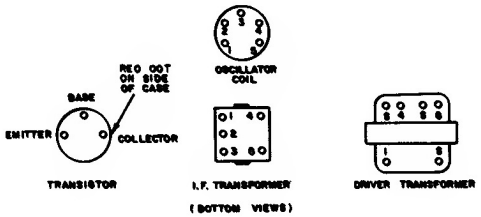

⏚ = COMMON GROUND.

⊡ = EXTERNAL CONNECTOR TO PRINTED CIRCUIT BOARD.

RESISTANCE VALUES ARE IN OHMS.; R = 1000.

CAPACITANCE VALUES LESS THAN 1.0 ARE IN MICROFARADS (μf) AND VALUES GREATER THAN 1.0 ARE IN MICRO-MICROFARADS (μμf) EXCEPT WHERE NOTED.

VOLTAGE READINGS TO COMMON GROUND (+) ARE MEASURED WITH VACUUM TUBE VOLTMETER UNDER NO SIGNAL CONDITIONS.

TOTAL BATTERY CURRENT DRAIN UNDER NO SIGNAL CONDITIONS IS 8 TO 15 MA.

SIGNAL TEST POINTS	TEST FREQUENCY	SERIES CAPACITOR TO GENERATOR	INPUT FOR 50MW OUTPUT (1.5V ACROSS 45Ω)
TR-1 BASE	455 KC	.05μf	520μV
TR-2 BASE	455 KC	.05μf	28μV
TR-3 BASE	455 KC	.05μf	5μV
STANDARD LOOP	1000 KC	STANDARD LOOP	200μV/M

Position of Variable	Generator Frequency	Dummy Antenna	Generator Connections	Trimmers Adj. in order shown for Max. Output	Function of Trimmer
Open	455 Kc	.05 μf	C1A	A1 (Top of T3)	I.F.
				A2 (Top of T2)	I.F.
				A3 (Top of T1)	I.F.
Open	1670 Kc		*Test Loop	A4	Oscillator
1400 Kc	1400 Kc		*Test Loop	A5	Antenna
600 Kc	600 Kc		*Test Loop	Check Point	

*Standard Hazeltine Test Loop Model 1150 or 3 turns of wire about 6" in diameter placed about one foot from the set loop.

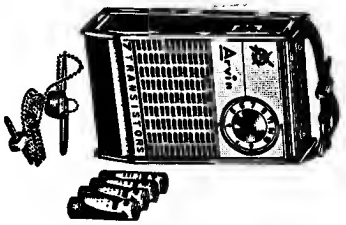

ARVIN Models 61R48, 61R49, Code 1.62201