Arvin MODELS 62R65, 62R69, CODE 1.66102

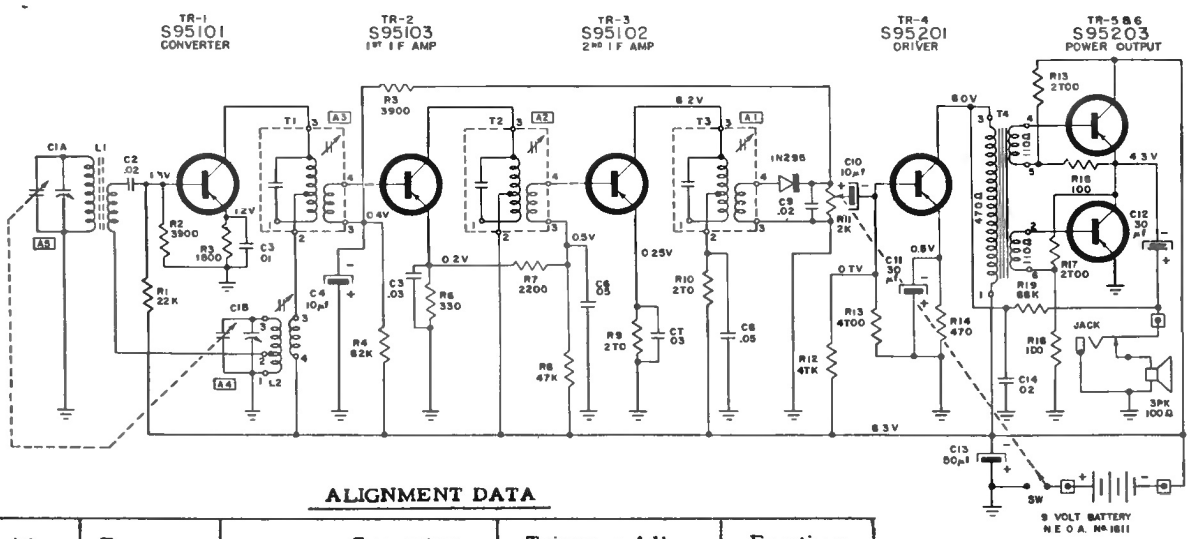

ALIGNMENT DATA

Position of Variable	Frequency of Generator	Dummy Antenna	Generator Output Connection	Trimmer Adj. in order shown for Max. Output	Functions of Trimmer
Open	455 Kc	.05 mf.	C1A	A1 (Top of T3)	I. F.
				A2 (Top of T2)	I. F.
				A3 (Top of T1)	I. F.
Open	1670 Kc		*Test Loop	A4	Oscillator
1400 Kc	1400 Kc		*Test Loop	A5	Antenna
600 Kc	600 Kc		*Test Loop	Check Point	

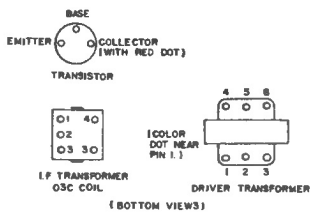

*Standard Hazeltine Test Loop Model 1150 or 3 turns of wire 6" in diameter placed about one foot from the receiver antenna.

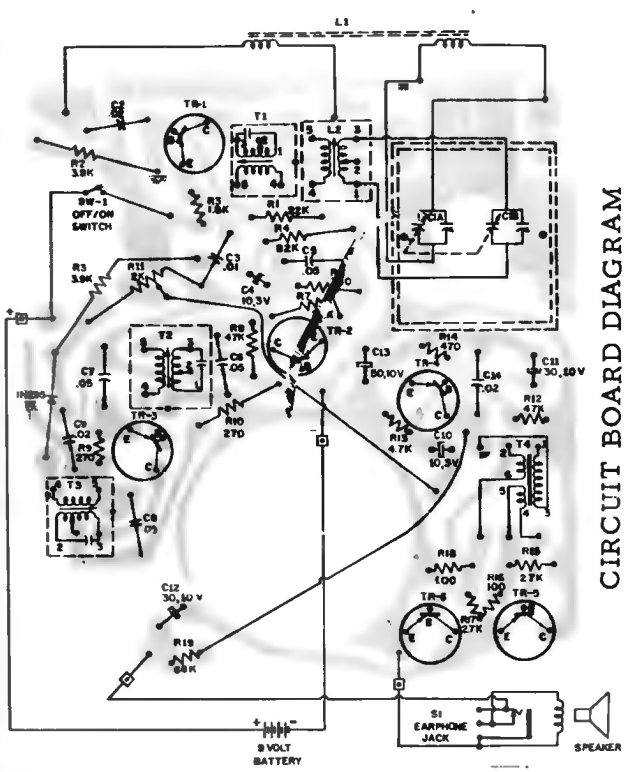

CIRCUIT BOARD DIAGRAM

⏚ = COMMON GROUND

⊡ = EXTERNAL CONNECTION TO PRINTED CIRCUIT

RESISTANCE VALUES ARE IN OHMS. K = 1000

CAPACITANCE VALUES LESS THAN 1.0 ARE IN MICROFARADS (µf) AND VALUES GREATER THAN 1.0 ARE IN MICRO-MICROFARADS (µµf) EXCEPT WHERE NOTED

VOLTAGE READINGS TO COMMON GROUND (+) ARE MEASURED WITH VACUUM TUBE VOLTMETER UNDER NO SIGNAL CONDITIONS

TOTAL BATTERY CURRENT DRAIN UNDER NO SIGNAL CONDITIONS, 7 TO 10 MA.

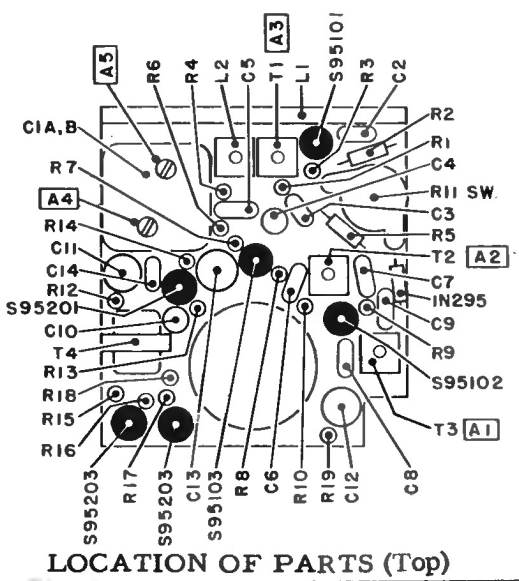

LOCATION OF PARTS (Top)