ARVIN Model 63R38, Code 1.75001

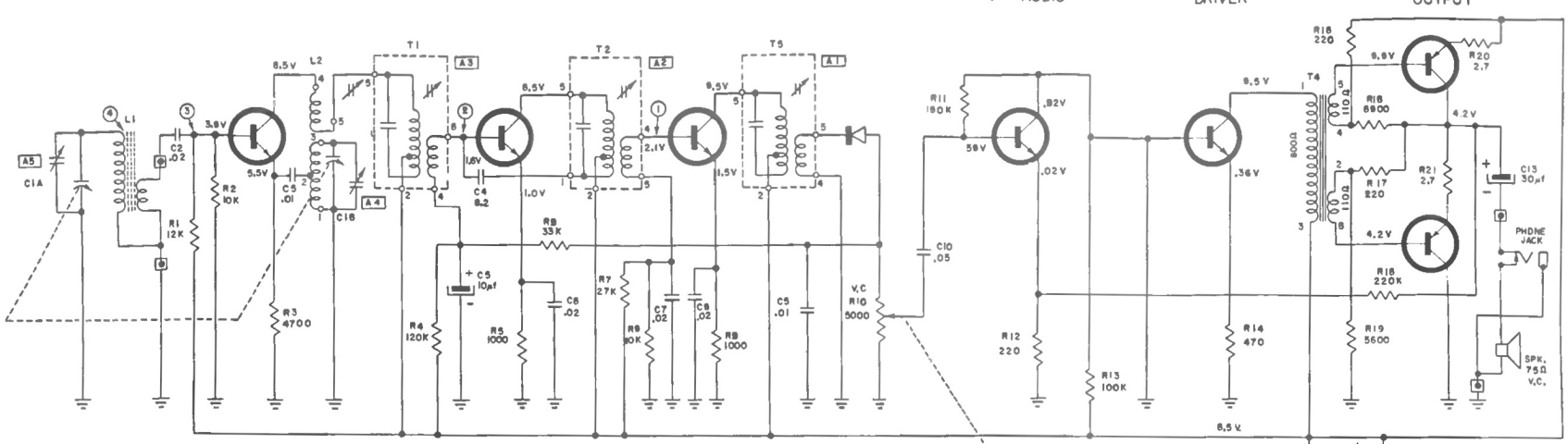

SIGNAL TEST POINTS	TEST FREQUENCY	SERIES CAPACITOR TO GENERATOR	INPUT FOR 5 M W OUTPUT (.8V ACROSS 75Ω)
1	455 KC	.05 µf	500 µ V
2	455 KC	.05 µf	12 µ V
3	455 KC	.05 µf	2 µ V
4	1000 KC	STANDARD LOOP	200 µ V/M

COLLECTOR
TR-1,-2,-3,-4-5
TRANSISTOR
(BOTTOM VIEW)

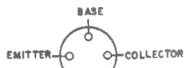

TR-6,-7
TRANSISTOR
(BOTTOM VIEW)

I.F TRANSFORMER & OSCILLATOR COIL
(BOTTOM VIEW)

CAPACITANCE VALUES LESS THAN 1.0 ARE IN MICROFARADS (µf), AND VALUES GREATER THAN 1.0 ARE IN MICRO-MICROFARADS (µµf) EXCEPT WHERE NOTED.

VOLTAGE READINGS TO COMMON GROUND ARE MEASURED WITH VACUUM TUBE VOLTMETER UNDER NO SIGNAL CONDITIONS WITH TUNING CAPACITOR CLOSED AND VOLUME CONTROL AT MAXIMUM CLOCKWISE ROTATION

RESISTANCE VALUES ARE IN OHMS, K=1000.

⏚ = COMMON GROUND SYMBOL

⊡ = EXTERNAL CONNECTION TO PRINTED CIRCUIT

TOTAL BATTERY CURRENT DRAIN UNDER NO SIGNAL CONDITIONS, 8 TO 14 MA
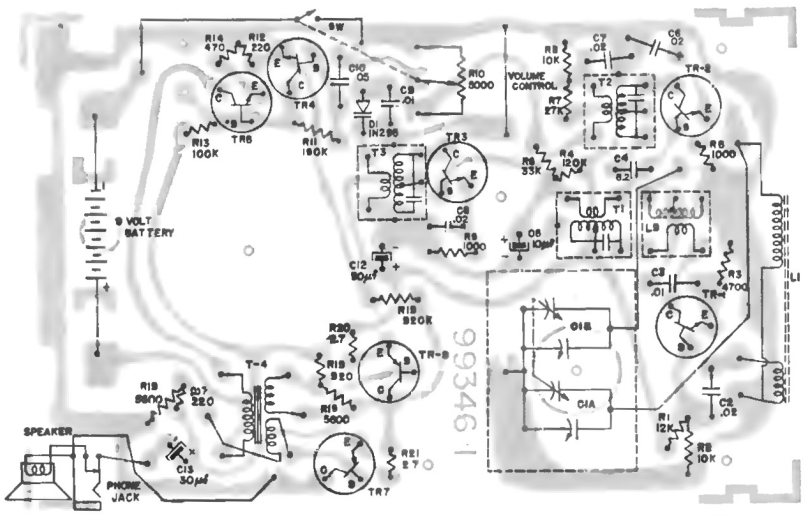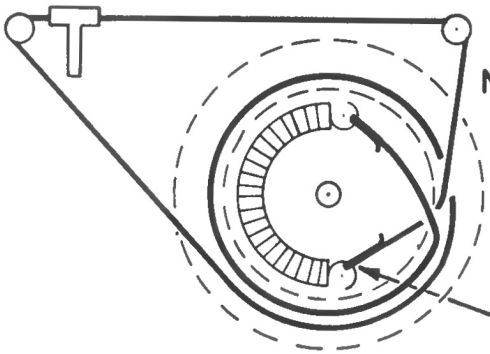
I. F. 455 KC.