Arvin

CODE 1. 81601
MODEL 64R38

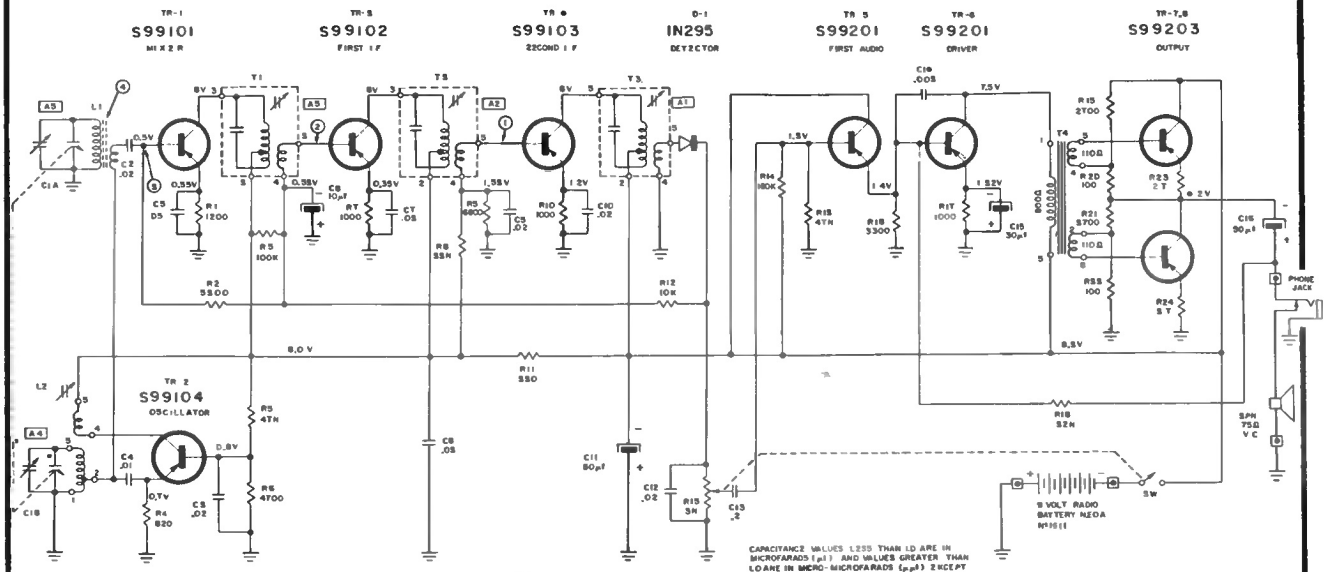

SIGNAL TEST POINTS	TEST FREQUENCY	SERIES CAPACITOR TO GENERATOR	INPUT FOR 5 M W OUTPUT 1.6V ACROSS 75Ω
①	455 KC	.05μf	300 μV
②	455 KC	.03μf	25 μV
③	455 KC	.05μf	5 μV
④	1000 KC	STANDARD LOOP	200 μV/M

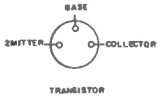

CAPACITANCE VALUES LESS THAN 10 ARE IN MICROFARADS (μf) AND VALUES GREATER THAN 10 ARE IN MICRO-MICROFARADS (μμf) EXCEPT WHERE NOTED.

VOLTAGE READINGS TO COMMON GROUND ARE MEASURED WITH VACUUM TUBE VOLTMETER UNDER NO SIGNAL CONDITIONS WITH TUNING CAPACITOR CLOSED AND VOLUME CONTROL AT MAXIMUM CLOCKWISE ROTATION

RESISTANCE VALUES ARE IN OHMS, K=1000.

⏚ - COMMON GROUND SYMBOL

▭ - INTERNAL CONNECTION TO PRINTED CIRCUIT

TOTAL BATTERY CURRENT DRAIN UNDER NO SIGNAL CONDITIONS, 8 TO 14 MA

I F TRANSFORMER & OSCILLATOR COIL

DRIVER TRANSFORMER

(BOTTOM VIEWS)

ALIGNMENT PROCEDURE
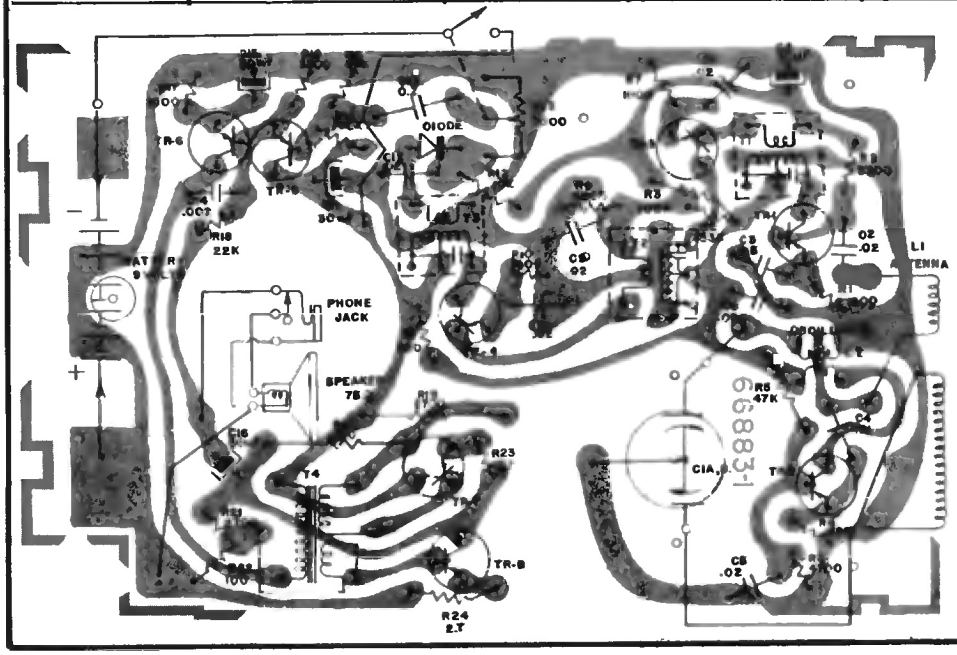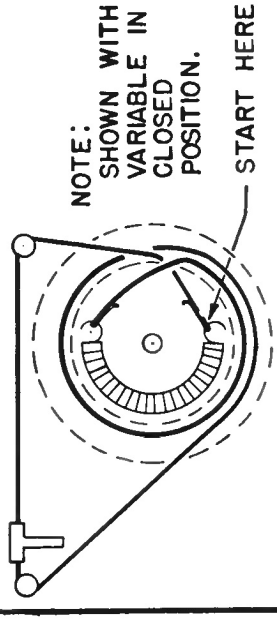
Position of Variable	Generator Frequency	Dummy Antenna	Generator Connections	Trimmers Adj. in order shown for Max. Output	Function of Trimmer
Open	455 Kc	.05 μf	C1A	A1 (Top of T3)	I. F.
				A2 (Top of T2)	I. F.
				A3 (Top of T1)	I. F.
Open	1640 Kc		*Test Loop	A4	Oscillator
1400 Kc	1400 Kc		*Test Loop	A5	Antenna
600 Kc	600 Kc		*Test Loop	Check Point