Arvin

MODEL 72P33 CODE 1.72401
MODEL 72P03 CODE 1.68301

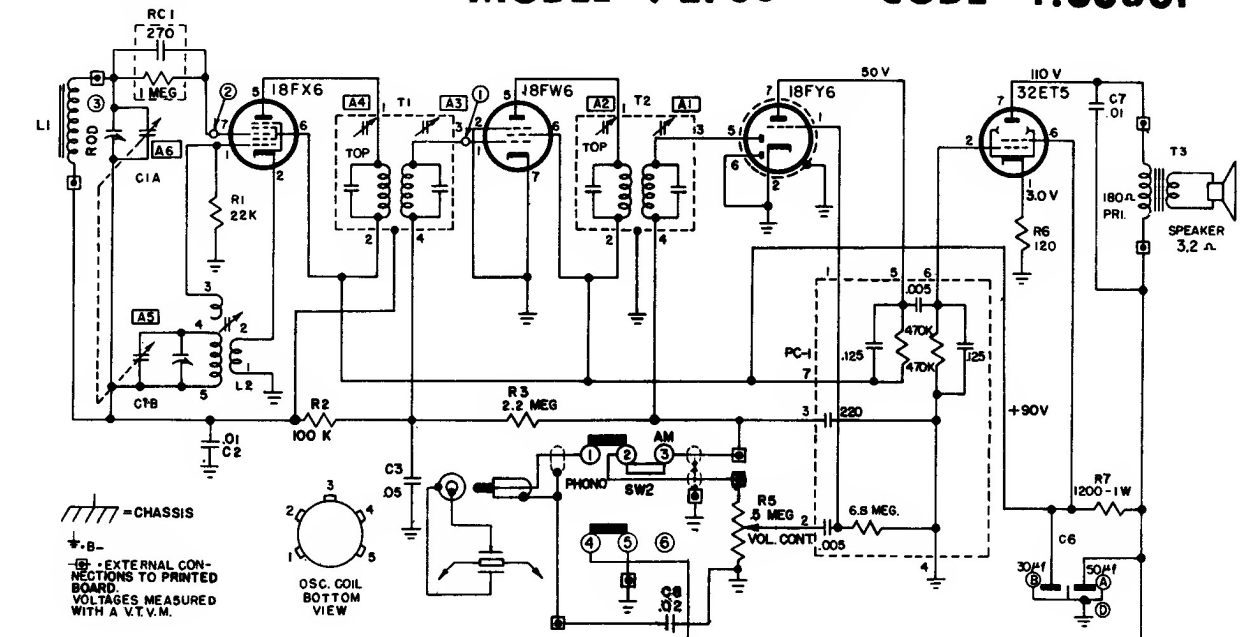

APPROXIMATE SENSITIVITIES

CIRCUIT POINT	DUMMY TO GENERATOR	INPUT FOR .05 WATT OUTPUT (0.4 VOLTS ACROSS VC)	INPUT FOR .5 WATT OUTPUT (1.0 VOLTS ACROSS VC)
1	.05μf AT 455 KC	2000μ V	5000μ V
2	.05μf AT 455 KC	60	150
3	STANDARD LOOP AT 1000 KC	200μ V/M	500μ V/M

ALIGNMENT PROCEDURE

PRELIMINARY:

Output meter connection ..... Across speaker voice coil
Output meter reading to indicate 50 milliwatts (standard output) ..... 1.26 volts
Connection of generator ground lead ..... Floating ground
Generator modulation ..... 30% 400 cycles
Position of Volume Control ..... Fully clockwise

Position of Variable	Frequency of Generator	Dummy Antenna	Generator Output Connection	Trimmers Adjusted in Order Shown for Maximum Output	Function of Trimmer
Open	455 Kc	.05 μ fd	Pin 7 18FX6	A1, A2, A3, A4	I.F.
Open	1640 Kc		* Test Loop	A5	Oscillator
1400	1400 Kc		* Test Loop	A6	Antenna
1000	1000 Kc		* Test Loop	Fan C1A Plates	
600	600 Kc		* Test Loop	Fan C1A Plates	

*Standard Hazeltine Test Loop Model 1150 or 3 turns of wire about 6" in diameter placed about one foot from the set loop.