ARVIN Models 72P59 and 72P68 (72P68 uses a 3-speaker system)

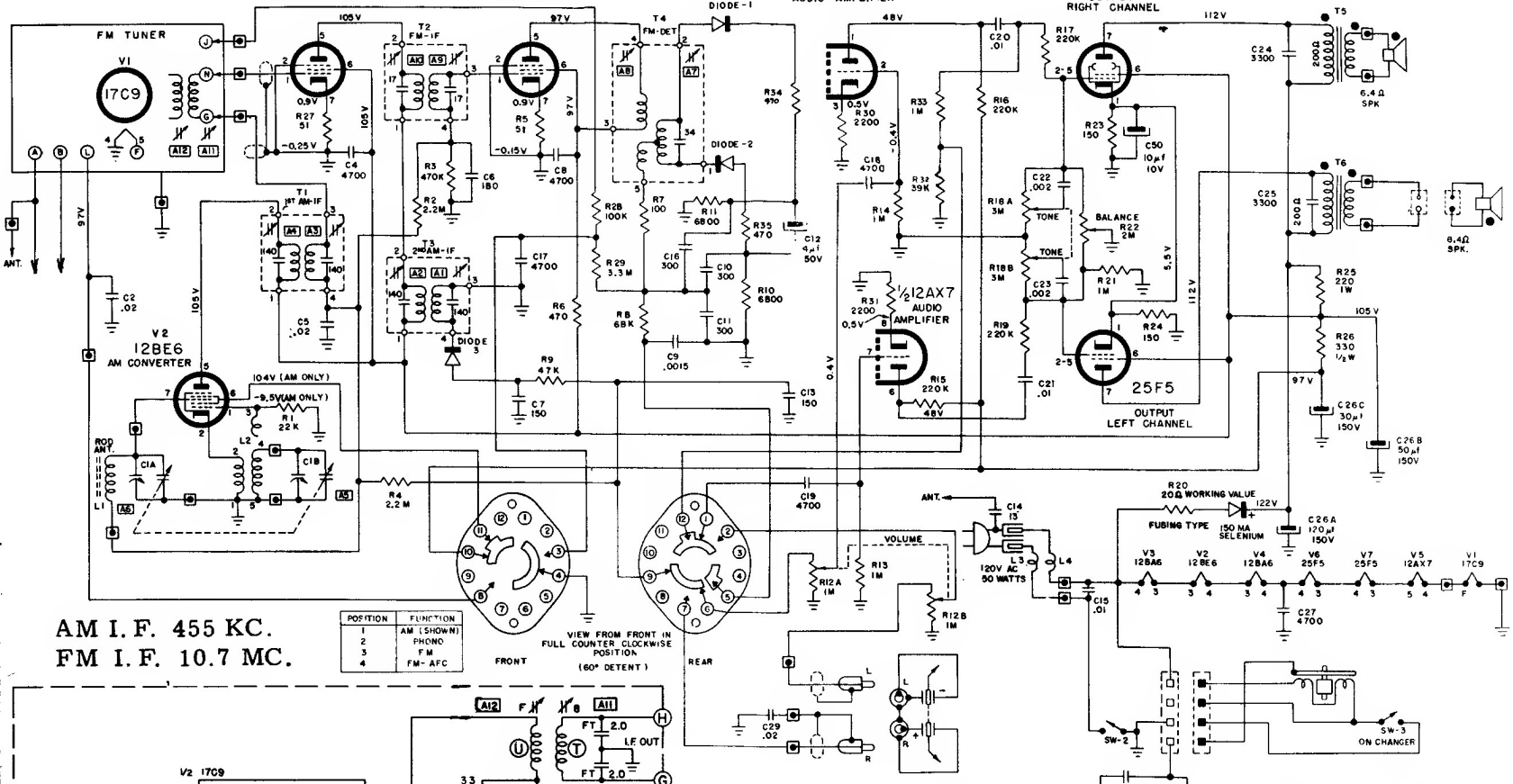

AM I.F. 455 KC.
FM I.F. 10.7 MC.

POSITION	FUNCTION
1	AM (SHOWN)
2	PHONO
3	FM
4	FM-AFC

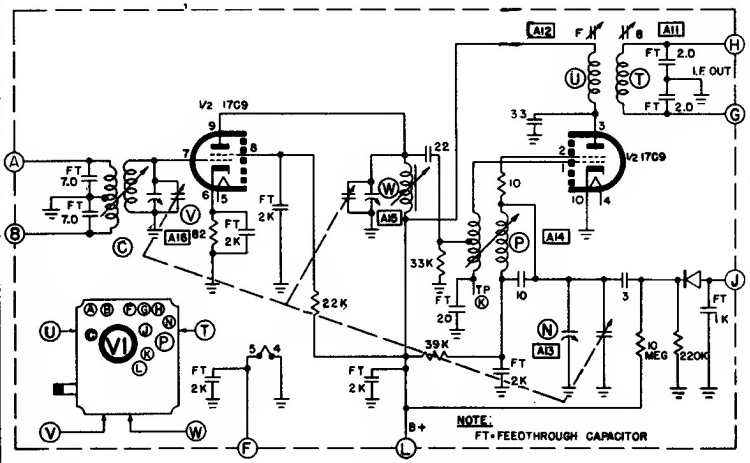

TUNER SCHEMATIC

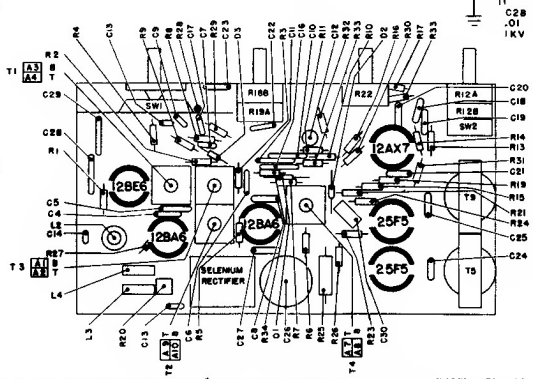

COMPONENTS IN THIS AMPLIFIER ARE INTERCONNECTED TO RESULT IN A CONSISTENT PHASE RELATION BETWEEN CHANNELS DO NOT DISTURB THIS PHASE RELATIONSHIP DURING SERVICING.

● = PHASING DOT.

SPEAKER (POSITIVE VOLTAGE MOVES VOICE COIL OUTWARD).

⏚ = B- ⏚ = CHASSIS

⊕ = EXTERNAL CONNECTION TO PRINTED BOARD.

VOLTAGES MEASURED TO B- WITH A VACUUM TUBE VOLTMETER ±20%, NO SIGNAL, SELECTOR SWITCH IN FM POSITION UNLESS OTHERWISE NOTED.

RESISTANCE VALUES ARE IN OHMS K=1,000; M=1,000,000.

CAPACITANCE VALUES LESS THAN (1) ARE IN MICROFARADS (μf), AND VALUES OF (1) OR GREATER ARE IN MICRO-MICROFARADS (μμf) UNLESS OTHERWISE INDICATED

LOCATION OF PARTS