ARVIN PHONOGRAPH MODEL 80P78, CODE 1. 62001

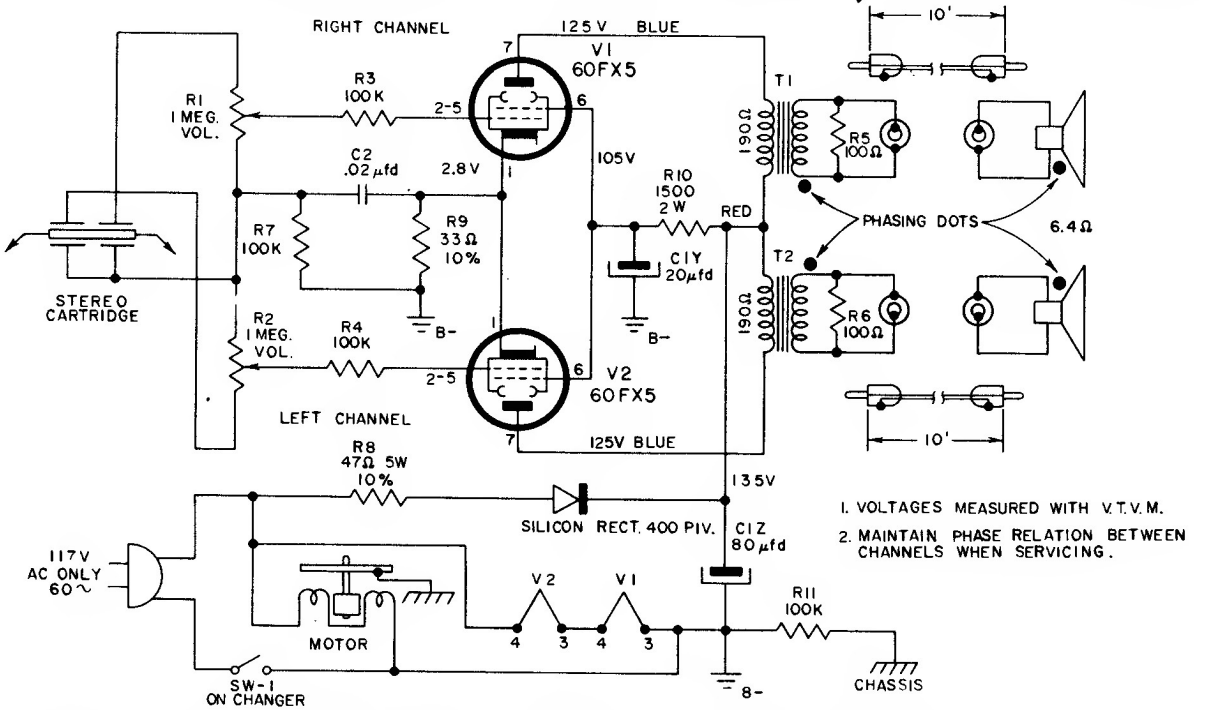

1. VOLTAGES MEASURED WITH V.T.V.M.
2. MAINTAIN PHASE RELATION BETWEEN CHANNELS WHEN SERVICING.