ALIGNMENT PROCEDURE

Output meter connection ..... Speaker voice coil
Output meter reading to indicate .5 watt output..... 1.26 Volts
Connection of generator ground lead..... Floating ground
Position of volume control..... Fully clockwise

Position of Variable	Frequency of Generator	Dummy Antenna	Generator Output Connection	Trimmer Adjustment for Maximum Output	Function of Trimmer
Open	455 Kc	.05 µf	Pin 7 12BE6	A1, A2	I.F.
1400 Kc	1400 Kc	50 µµf	Antenna Clip (Blue wire disconnected)	A3 Rock Variable while making this adj. to track antenna	Oscillator
600 Kc	600 Kc	50 µµf	Antenna Clip (Blue wire disconnected)	Antenna Sections plates	Check point

Keep signal generator at a low value to prevent detuning by AVC action.

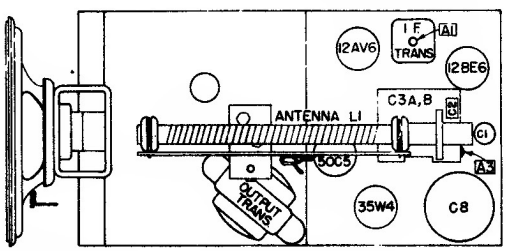

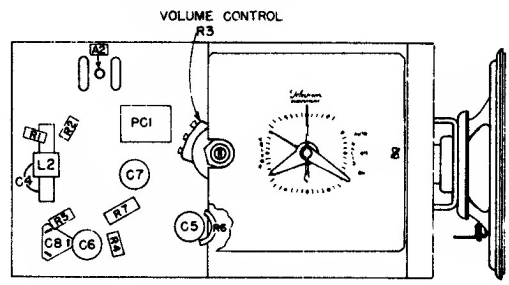

LOCATION OF PARTS UNDER CHASSIS

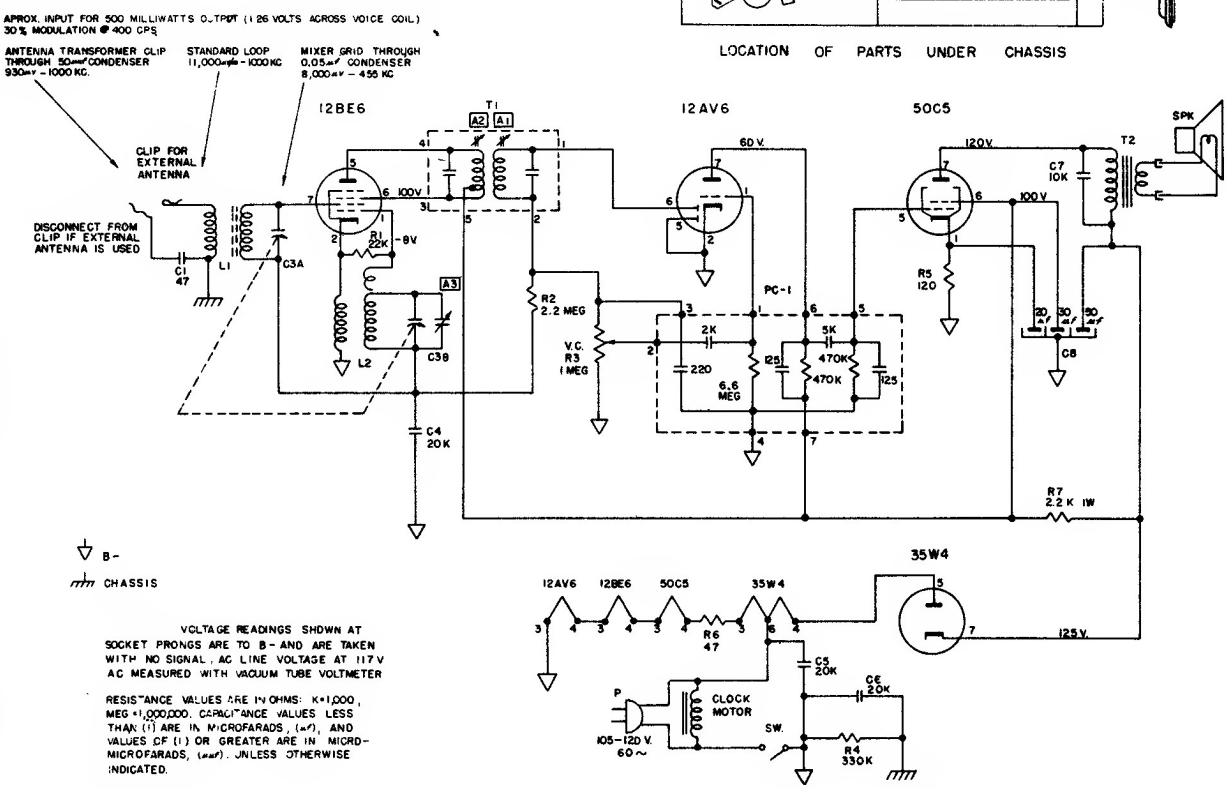

VOLTAGE READINGS SHOWN AT SOCKET PRONGS ARE TO B- AND ARE TAKEN WITH NO SIGNAL, AC LINE VOLTAGE AT 117 V AC MEASURED WITH VACUUM TUBE VOLTMETER

RESISTANCE VALUES ARE IN OHMS: K=1,000, MEG=1,000,000. CAPACITANCE VALUES LESS THAN (1) ARE IN MICROFARADS, (µf), AND VALUES OF (1) OR GREATER ARE IN MICRO-MICROFARADS, (µµf). UNLESS OTHERWISE INDICATED.