ARVIN INDUSTRIES, Models 8571, 8573, Chassis 1.41100,
Model 8572, Chassis 1.41300, is similar.

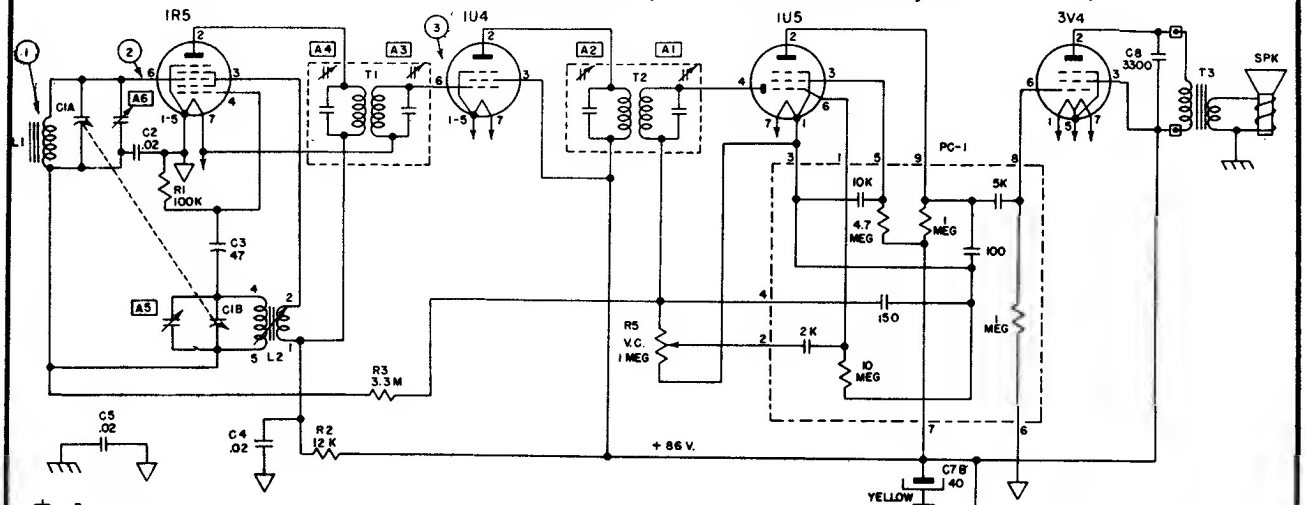

— B-

— CHASSIS OR CABINET

S.1 — SHOWN IN AC POSITION

— EXTERNAL CONNECTIONS TO BOARD.

VOLTAGE READINGS SHOWN AT SOCKET PRONGS ARE TO B- AND ARE TAKEN WITH NO SIGNAL, LINE VOLTAGE AT 117 V. AC, MEASURED WITH VACUUM TUBE VOLTMETER.

RESISTANCE VALUES ARE IN OHMS (K=1,000, MEG=1,000,000. CAPACITANCE VALUES LESS THAN (1) ARE IN MICROFARADS (µf), AND VALUES OF (1) OR GREATER ARE IN MICROMICROFARADS (µµf), UNLESS OTHERWISE INDICATED.

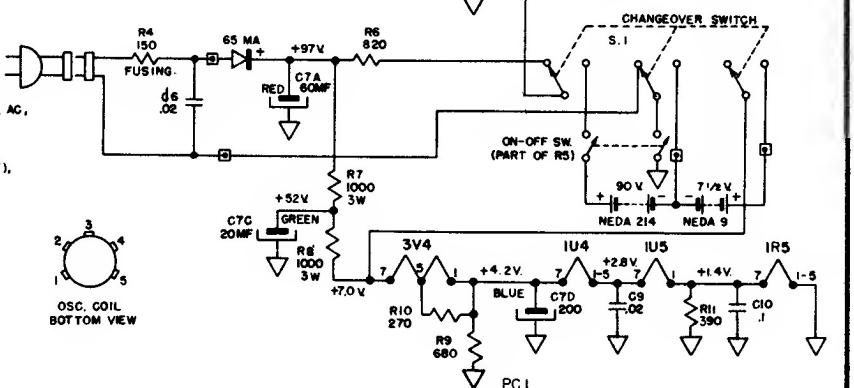

CIRCUIT POINT	DUMMY TO GENERATOR	INPUT FOR .05 WATT OUTPUT (0.4 VOLTS ACROSS V.C.)
1	.06µf AT 455 KC	2000 UV
2	.05µf AT 455 KC	60
3	STANDARD LOOP AT 1000 KC	200 UV /M

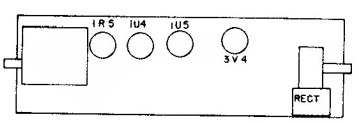

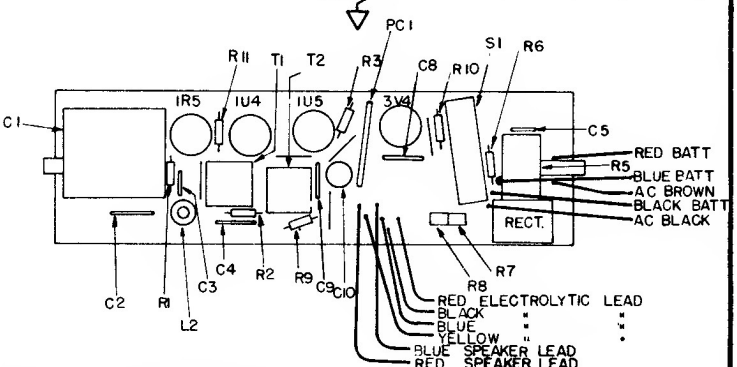

SPEAKER

Type: Permanent magnet
Size: 4 inch
Voice: Coil Impedance 3.2 Ohms

ALIGNMENT PROCEDURE

Output meter reading to indicate .05 watt across voice coil . . . 0.4V
Generator ground lead connected . . . . . floating ground

Position of Variable	Generator Frequency	Dummy Antenna	Generator Connections	Adjust Trimmers (In order shown)	Function of Trimmer
Open	455 Kc	.05 µf	Mixer Grid	A1, A2, A3, A4	I.F.
Open	1670 Kc		* Test Loop	A5	Oscillator
1400 Kc	1400 Kc		* Test Loop	A6	Antenna
600 Kc	600 Kc		* Test Loop	Check Point	

* Standard Hazeltine Test Loop Model 1150 or 3 turns of wire about 6" in diameter placed about one foot from the set loop.