Arvin MODEL 92P48 CODE 1.70601

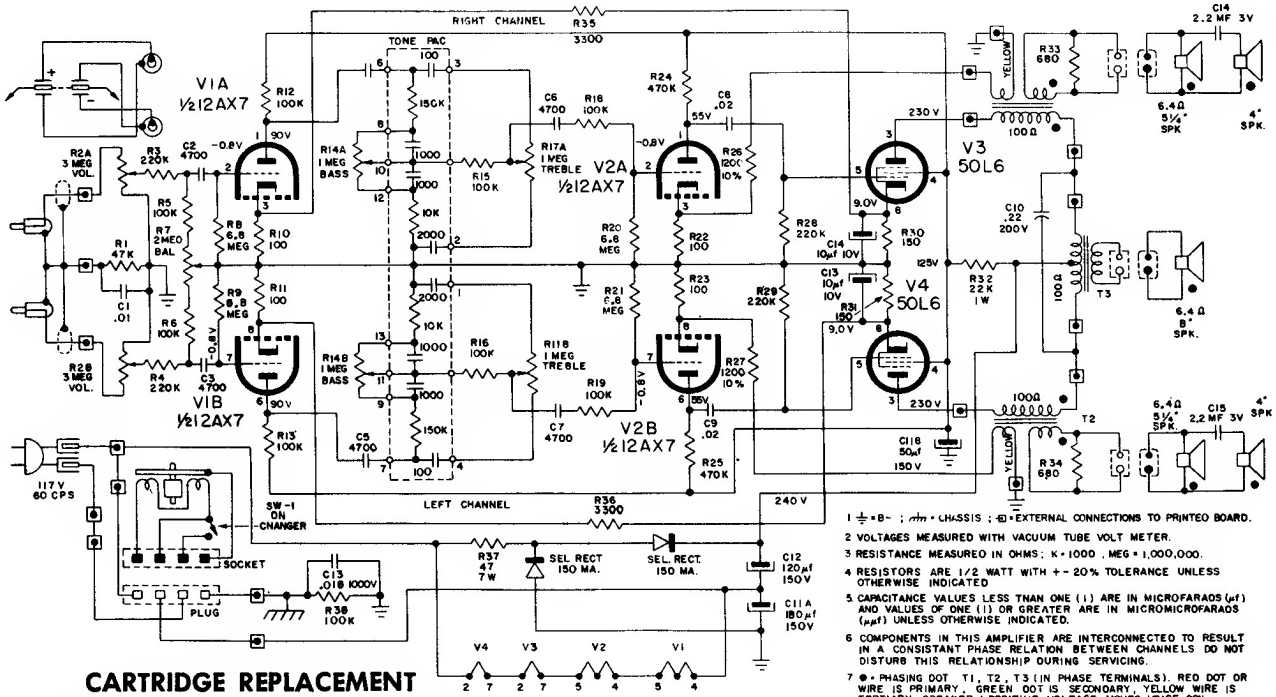

1 ⏚ = B- ; ⏥ = CHASSIS ; ⊡ = EXTERNAL CONNECTIONS TO PRINTED BOARD.

2 VOLTAGES MEASURED WITH VACUUM TUBE VOLT METER.

3 RESISTANCE MEASURED IN OHMS; K = 1000, MEG = 1,000,000.

4 RESISTORS ARE 1/2 WATT WITH +-20% TOLERANCE UNLESS OTHERWISE INDICATED

5 CAPACITANCE VALUES LESS THAN ONE (1) ARE IN MICROFARADS (µf) AND VALUES OF ONE (1) OR GREATER ARE IN MICROMICROFARADS (µµf) UNLESS OTHERWISE INDICATED.

6 COMPONENTS IN THIS AMPLIFIER ARE INTERCONNECTED TO RESULT IN A CONSISTANT PHASE RELATION BETWEEN CHANNELS DO NOT DISTURB THIS RELATIONSHIP DURING SERVICING.

7 ● = PHASING DOT T1, T2, T3 (IN PHASE TERMINALS). RED DOT OR WIRE IS PRIMARY, GREEN DOT IS SECONDARY, YELLOW WIRE IS TERTIARY. SPEAKER (POSITIVE VOLTAGE MOVES VOICE COIL OUTWARD).

8 RESISTORS WITH THE SAME "R" NUMBER AND LETTERS FOLLOWING ARE GANGED TOGETHER

CARTRIDGE REPLACEMENT

To remove cartridge grasp the tip of the cartridge, and pull straight out. (See Illustration) To replace cartridge, align grooves in cartridge with grooves in cartridge holder and push in gently.

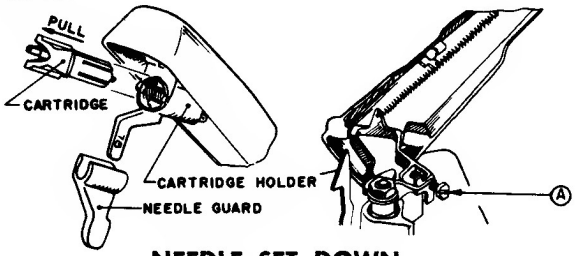

NEEDLE SET DOWN

Make needle set down adjustment only when necessary. To obtain the correct needle set down point, a screwdrive slot screw indicated by A (see illustration) is located at base of the tone arm. Turning screw clockwise moves the needle toward the outer edge of the record; counter-clockwise rotation moves the needle toward the center of the record.

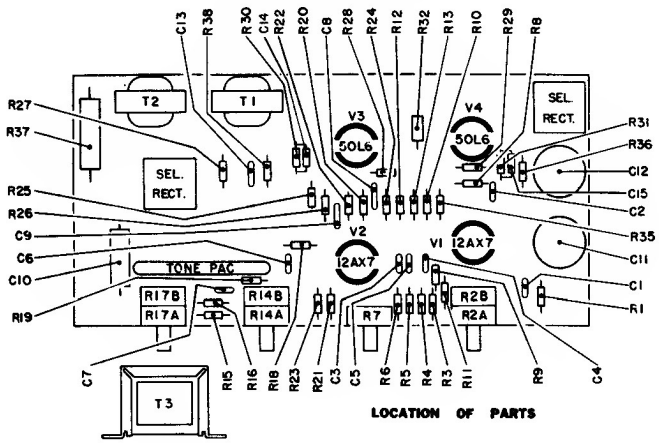

LOCATION OF PARTS

SCHEMATIC LOCATION	PART NO.	DESCRIPTION
	CAPACITORS	
C1	43674-1	.01 uf., Disc.
C2, 3, 4, 5, 6, 7	43674-15	.0047 uf., Disc.
C8, 9	43674-7	.02 uf., Disc.
C10	45503-4	.22 uf., Paper Tubular
C11A, B	97711-8	180-50/150V., Elect.
C12	97711-3	120 uf/150V., Elect.
C13	41135-6	.02 uf., Disc., 1000V
C14, 15	44396-2	10 uf., 10V., Elect.
T1, 2	96430-3	Transformer, Output
T3	43393-7	Transformer, Output

SCHEMATIC LOCATION	PART NO.	DESCRIPTION
	RESISTORS	
R1	43687-473	470 ohm, 1/2W., 20%
R2A, B	47100-9	Control, Stereo, Dual 3 meg ohm
R3, 4, 28, 29	43687-224	220K ohm, 1/2W., 20%
R5, 6, 12, 13, 15, 16, 18, 19, 38	43687-104	100K ohm, 1/2W., 20%
R7	49000-14	Control, Balance, 2 meg ohm
R8, 9, 20, 21	43687-685	6.8 meg ohm, 1/2W., 20%
R10, 11, 22, 23	43687-101	100 ohm, 1/2W., 20%
R14A, B	47100-15	Control, Bass, Dual, 1 meg ohm
R17A, B	47100-15	Control, Treble, Dual, 1 meg ohm
R24, 25	43687-474	470K ohm, 1/2W., 20%
R26, 27	43689-122	1200 ohm, 1/2W., 10%
R30, 31	43687-151	150 ohm, 1/2W., 20%
R32	47325-223	22K ohm, 1W., 20%
R33, 34	43689-681	680 ohm, 1/2W., 10%
R35, 36	43687-332	3300 ohm, 1/2W., 20%
R37	47727-4	47 ohm, Fusing