MODEL 55 AND 55-C

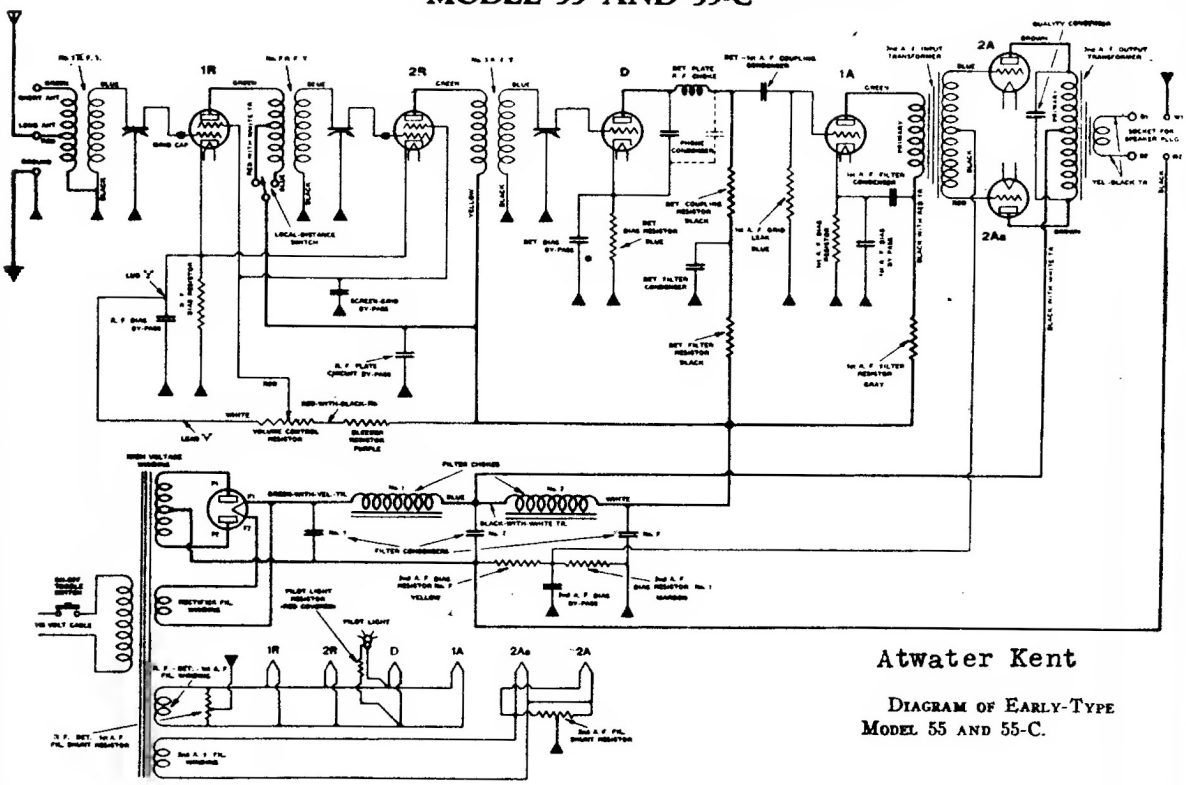

DIAGRAM OF EARLY-TYPE MODEL 55 AND 55-C.

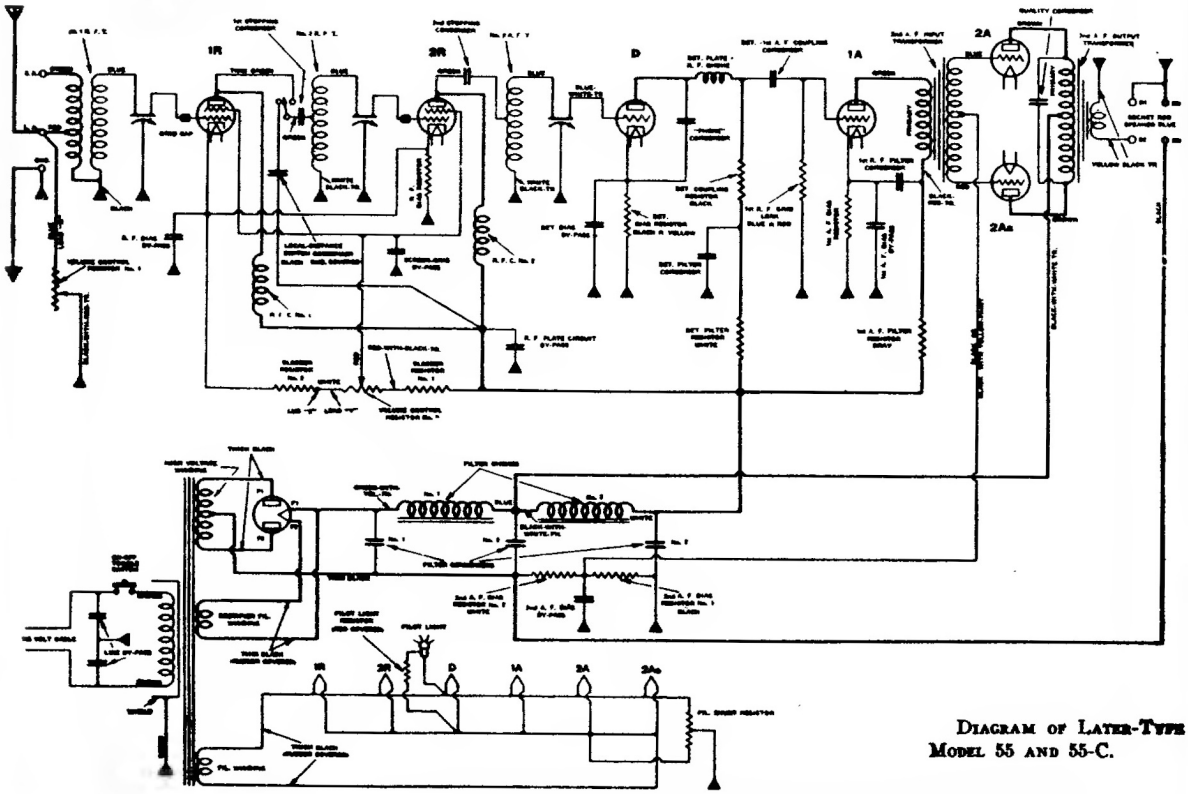

DIAGRAM OF LATER-TYPE MODEL 55 AND 55-C.