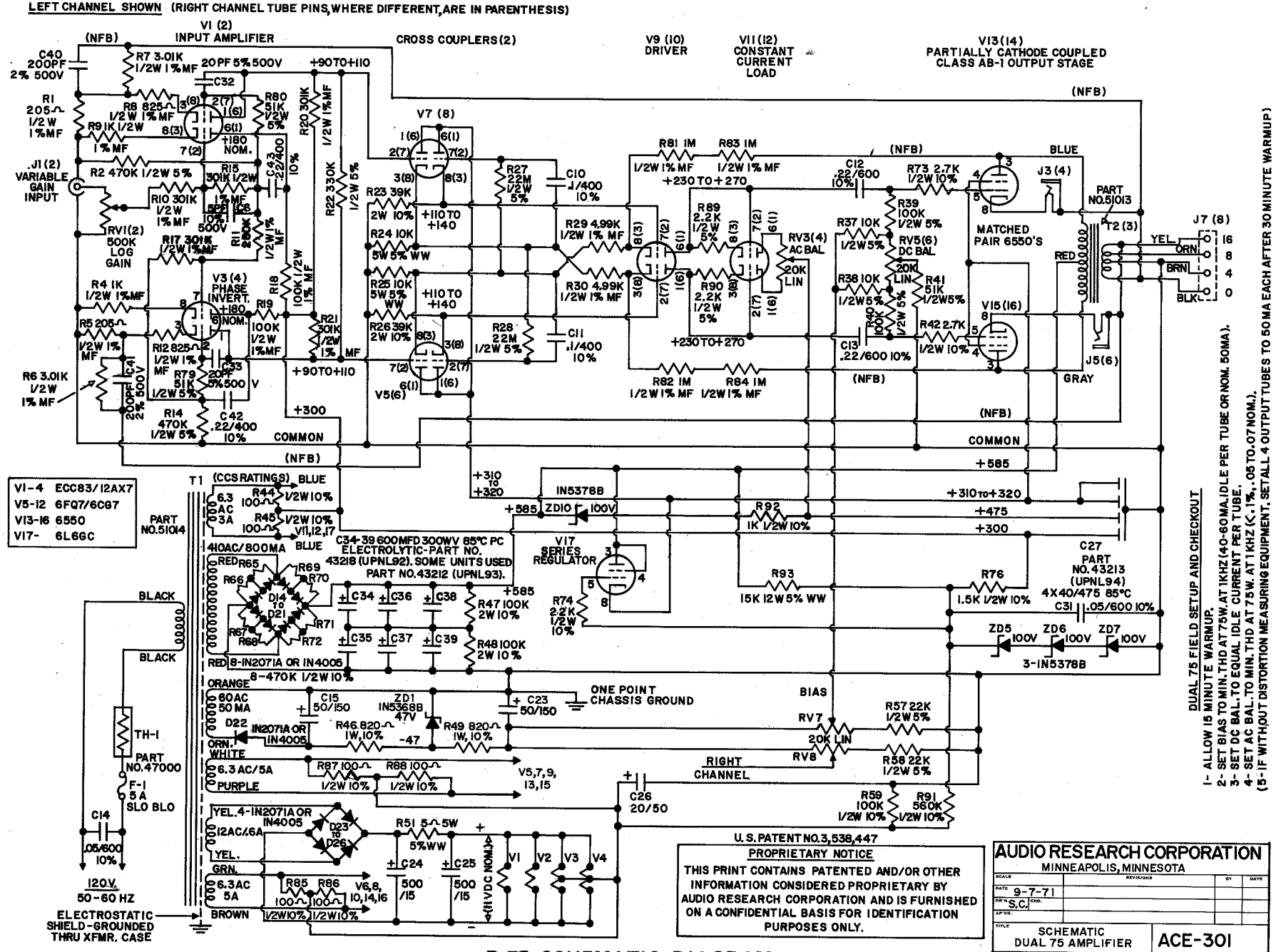

D-75 SCHEMATIC DIAGRAM