Bendix RADIO

MODELS 953A-953B-953C-953D

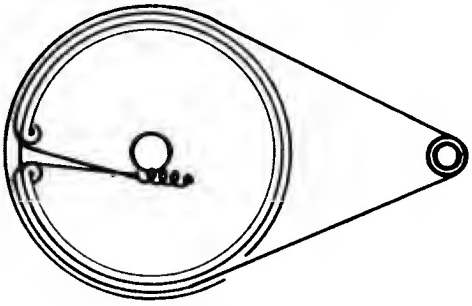

GANG FULLY CLOSED

Clock Models 853A, 853B, 853C, 853D, are similar but use a clock switching circuit.

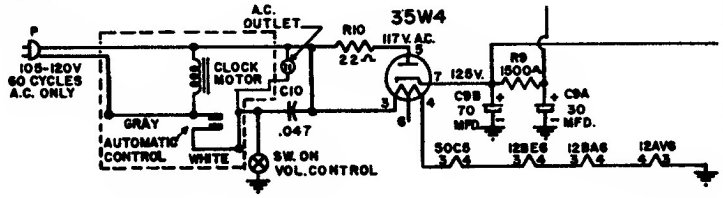

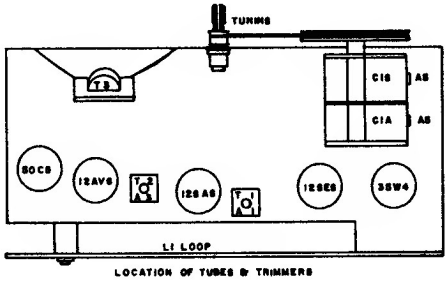

LOCATION OF TUBES & TRIMMERS

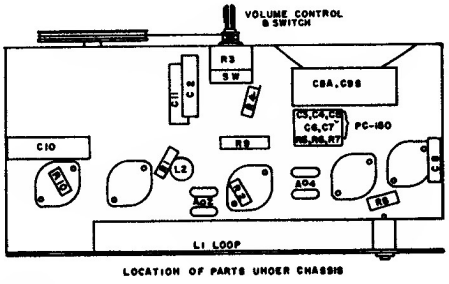

LOCATION OF PARTS UNDER CHASSIS

ALIGNMENT DATA

Position of Variable	Generator Frequency	Dummy Ant.	Generator Connection (high)	Generator Connection (low)	Adjust Trimmers (in order shown)	Trimmer Function
Open	455 Kc	.05 mfd	Mixer Grid	B—	A4, A3, A2, A1	I.F.
Open (Fully)	1640 Kc	50 mmf	*	B—	A6	Osc.
1400 Kc	1400 Kc	50 mmf	*	B—	A5	Ant.
1000 Kc	1000 Kc	50 mmf	*	B—	Check Point	
600 Kc	600 Kc	50 mmf	*	B—	Check Point	

* A loop fashioned of several turns of wire radiating the signal into the receiver's antenna or through the external antenna connection.

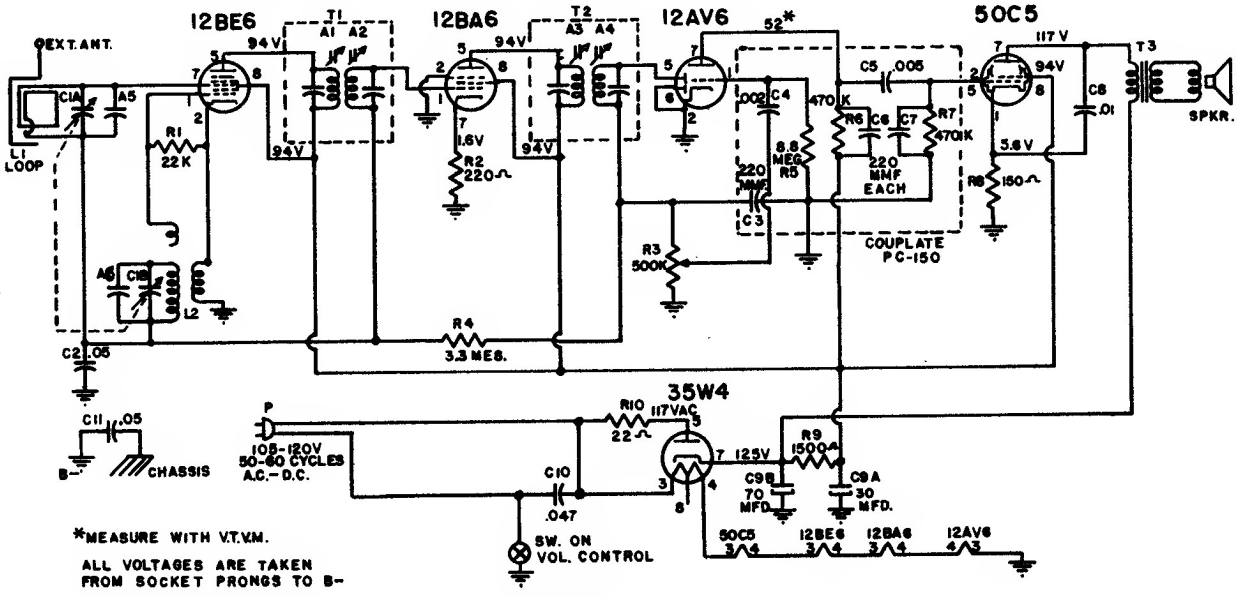

*MEASURE WITH V.T.V.M.

ALL VOLTAGES ARE TAKEN FROM SOCKET PRONGS TO B-