BULOVA

Circuit diagrams of various sets manufactured by Bulova Watch Co. The IF is 455 KC. for these sets.

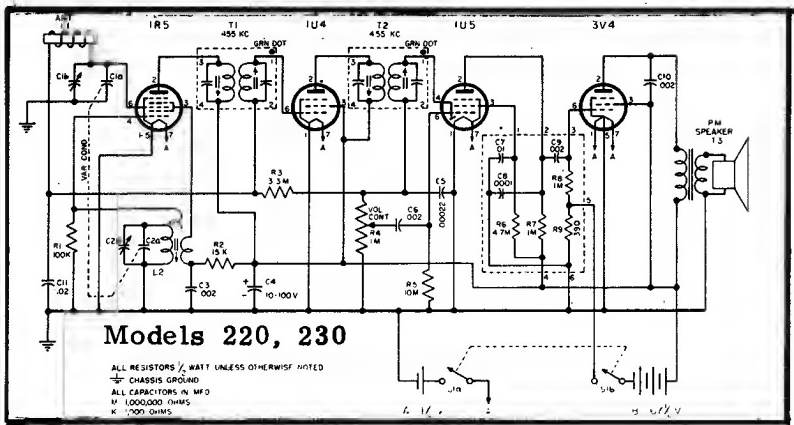

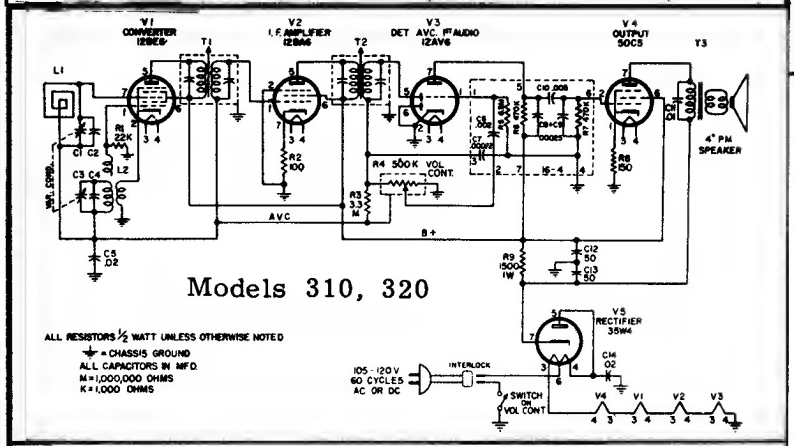

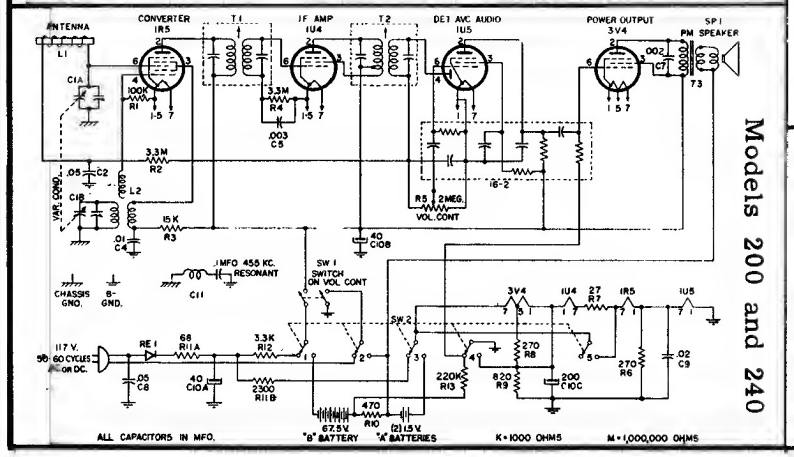

Models 200 and 240

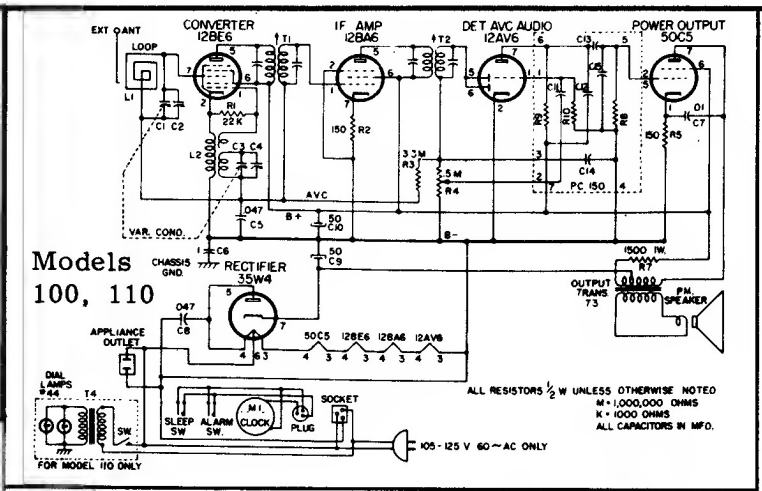

Models 100, 110

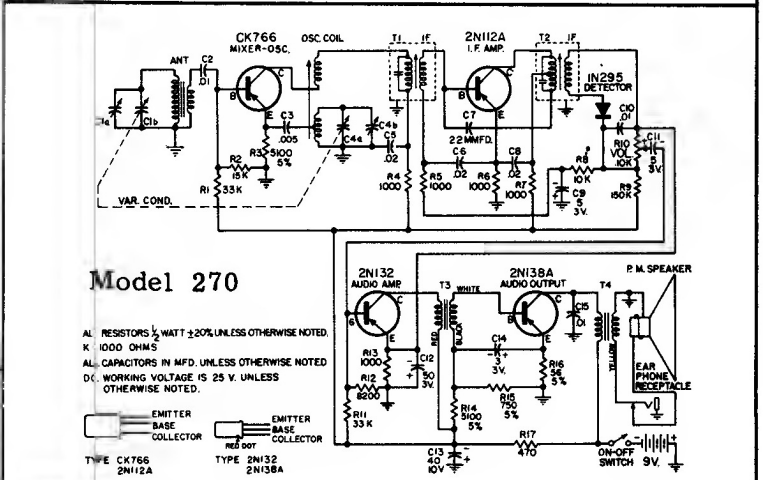

Model 270

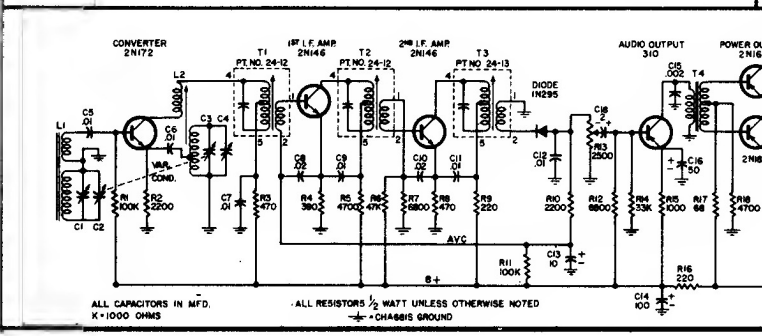

Model 260