BULOVA
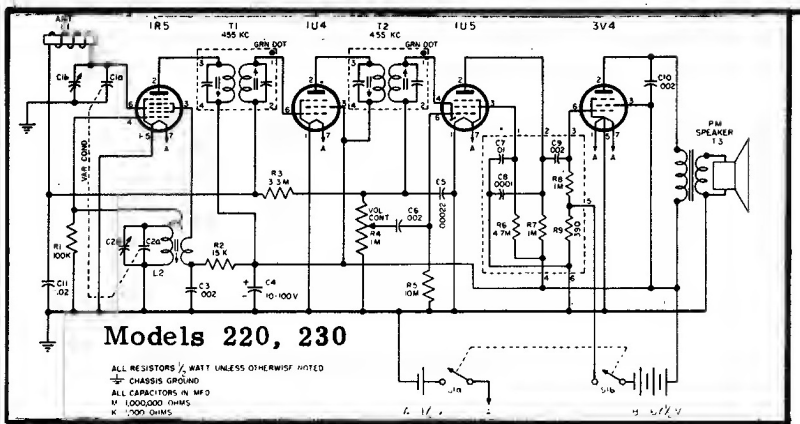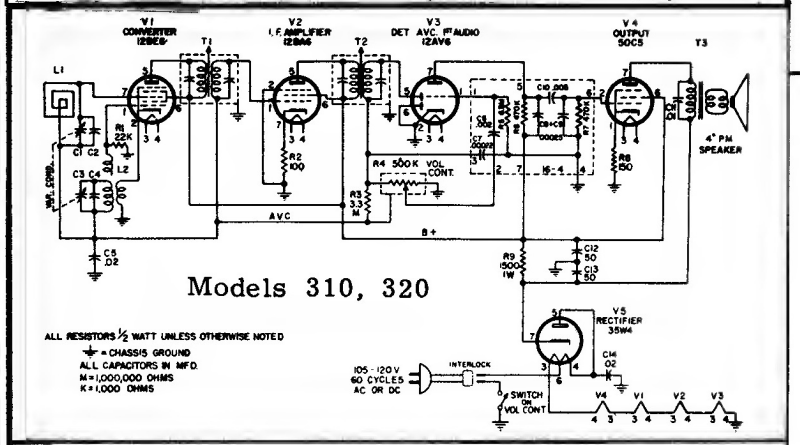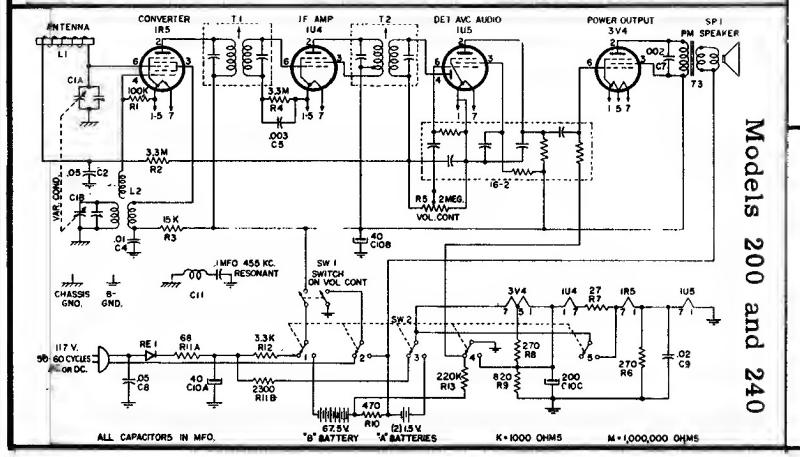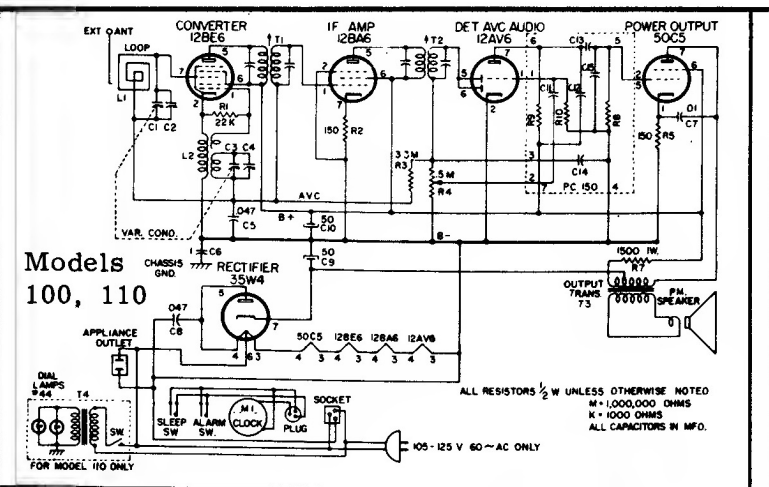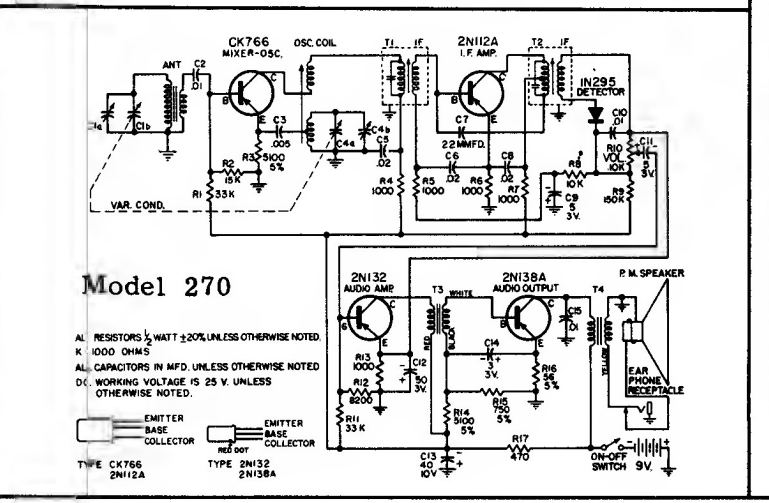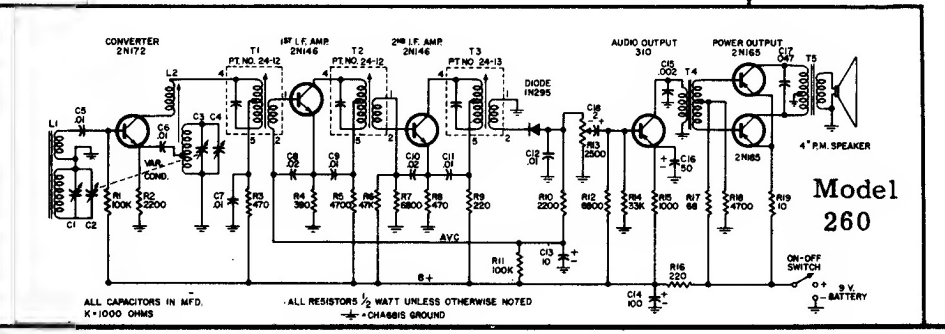
Circuit diagrams of various sets manufactured by Bulova Watch Co. The IF is 455 KC. for these sets.