CAPEHART-FARNSWORTH COMPANY

Capehart

HIGH FIDELITY PHONOGRAPH

Instrument Model

52PH56M 53PH56M

52PH56B 53PH56B

53PH56F

Amplifier Chassis

CA-241 CA-251

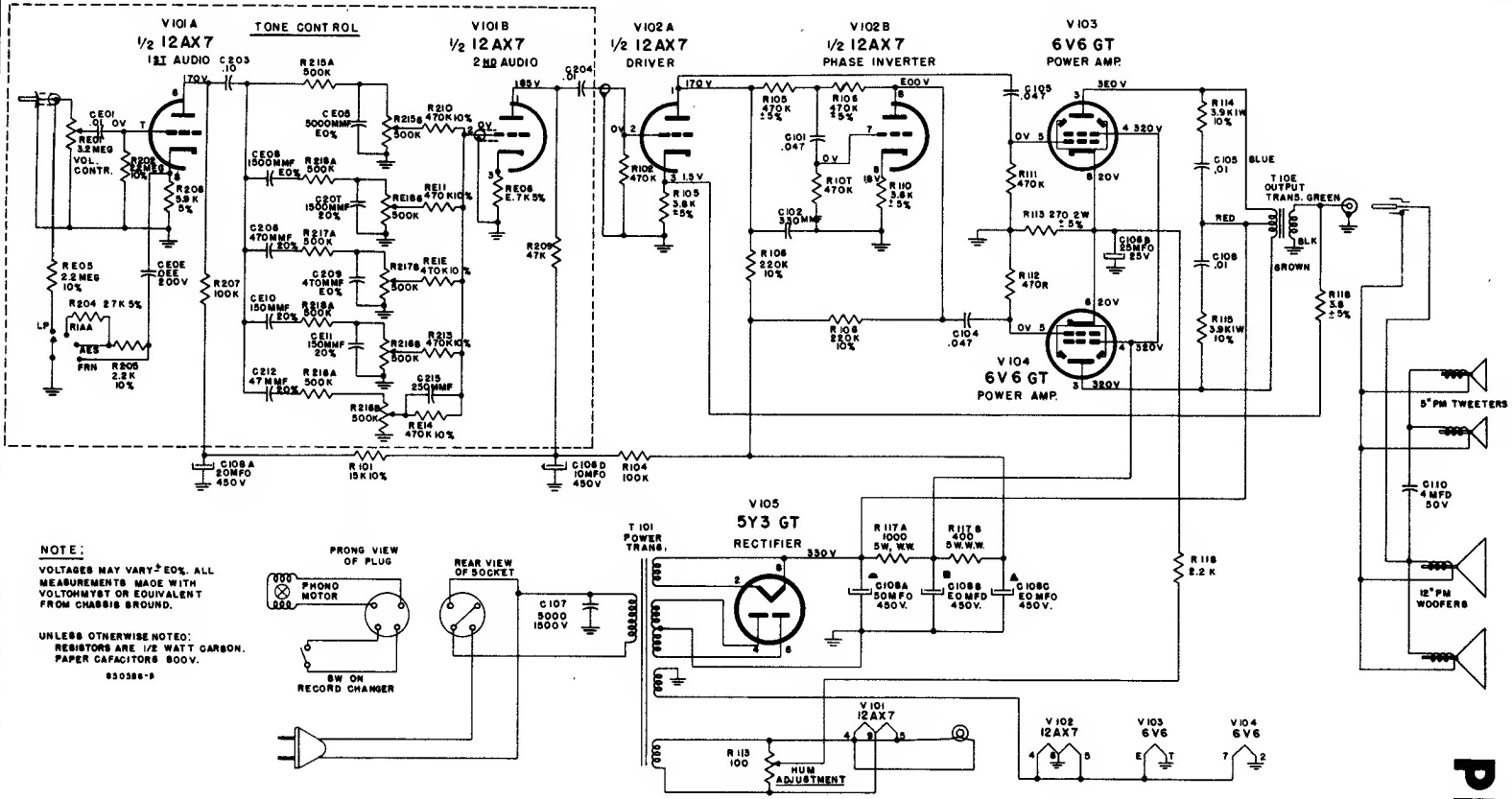

Removal of Chassis and Tone Control Assembly

NOTE: If it is necessary to gain access to the Tone Control Assembly only, then steps 2 and 4 will suffice for the removal of this assembly.

1. Remove the knots, disconnect the speaker lead running to the amplifier, and disconnect the two connections between the record changer and amplifier.
2. Remove the screws holding the panels to the cabinet directly in front of the changer. Remove the panels.
3. Press down gently on the record changer and remove the two "C" washers on the record changer mounting screws. Remove the changer.
4. Remove the screws holding the Tone Control Assembly to the cabinet.
5. Remove the four bolts which fasten the Amplifier chassis to the cabinet.
6. Re-insert the chassis and Tone Control Assembly by reversing the above procedure.