Capehart

AMPLIFIER CHASSIS
CA-156

4PH55M
4PH55B
16PH55M
16PH55B
16PH55F

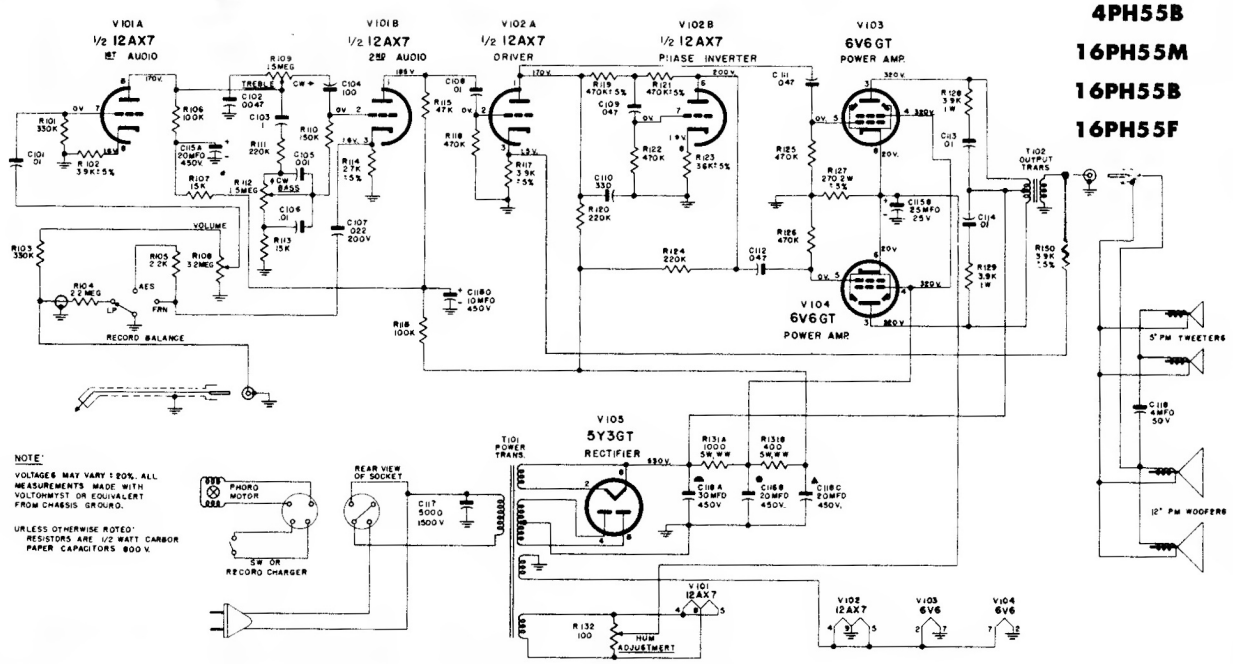

Capehart
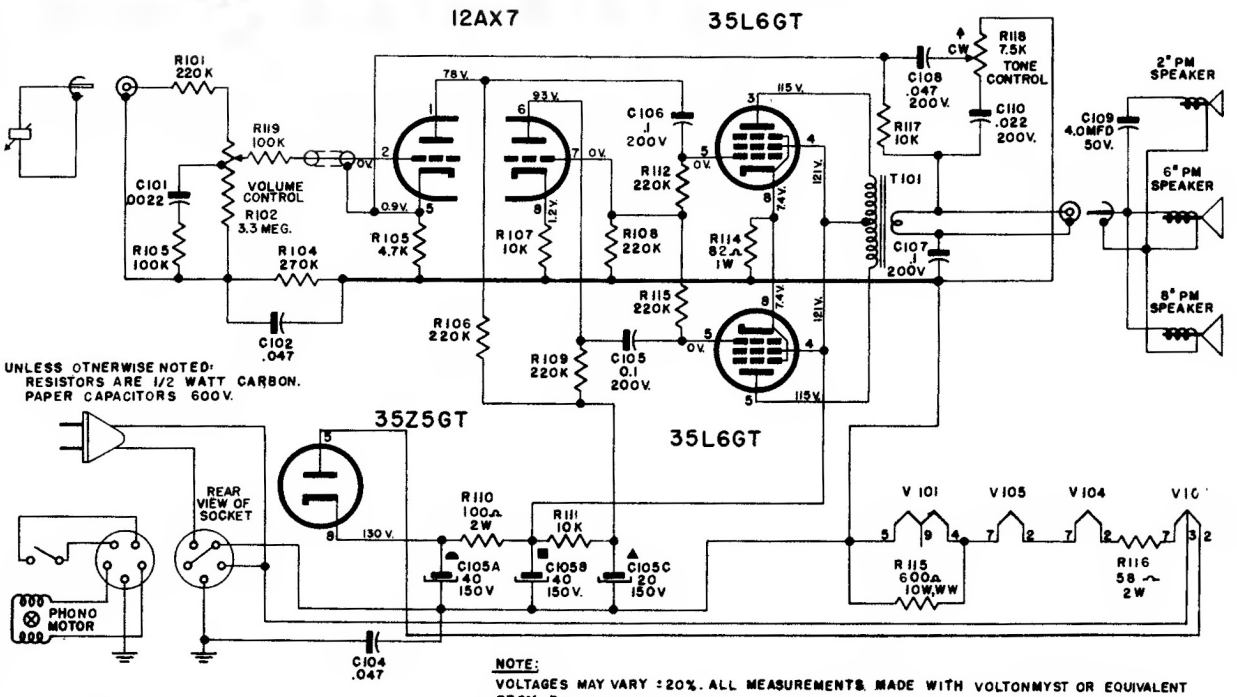
Model 6TP45M Amplifier Chassis CA-161