CROSLEY

MODELS 11-301U, 11-302U, 11-303U, 11-304U, 11-305U

(Chassis 303)

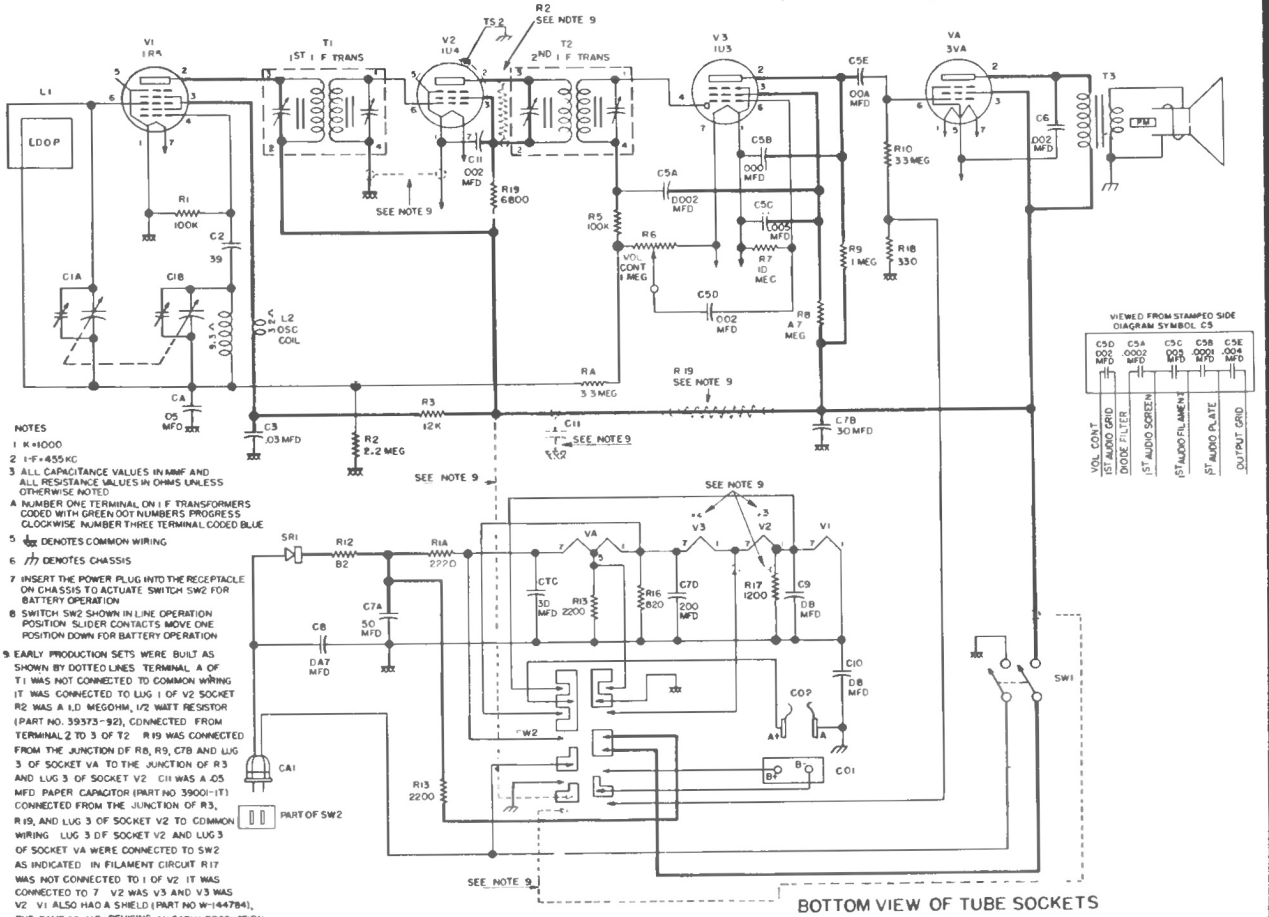

NOTES

1 K=1000
2 I-F=455KC
3 ALL CAPACITANCE VALUES IN MMF AND ALL RESISTANCE VALUES IN OHMS UNLESS OTHERWISE NOTED
4 NUMBER ONE TERMINAL ON I F TRANSFORMERS CODED WITH GREEN DOT NUMBERS PROGRESS CLOCKWISE NUMBER THREE TERMINAL CODED BLUE
5 ⏚ DENOTES COMMON WIRING
6 ⏚ DENOTES CHASSIS
7 INSERT THE POWER PLUG INTO THE RECEPTACLE ON CHASSIS TO ACTUATE SWITCH SW2 FOR BATTERY OPERATION
8 SWITCH SW2 SHOWN IN LINE OPERATION POSITION SLIDER CONTACTS MOVE ONE POSITION DOWN FOR BATTERY OPERATION
9 EARLY PRODUCTION SETS WERE BUILT AS SHOWN BY DOTTED LINES TERMINAL A OF T1 WAS NOT CONNECTED TO COMMON WIRING IT WAS CONNECTED TO LUG 1 OF V2 SOCKET R2 WAS A 1.0 MEGOHM, 1/2 WATT RESISTOR (PART NO. 39373-92), CONNECTED FROM TERMINAL 2 TO 3 OF T2 R19 WAS CONNECTED FROM THE JUNCTION OF R8, R9, C7B AND LUG 3 OF SOCKET VA TO THE JUNCTION OF R3 AND LUG 3 OF SOCKET V2 C11 WAS A .05 MFD PAPER CAPACITOR (PART NO 39001-1T) CONNECTED FROM THE JUNCTION OF R3, R19, AND LUG 3 OF SOCKET V2 TO COMMON WIRING LUG 3 OF SOCKET V2 AND LUG 3 OF SOCKET VA WERE CONNECTED TO SW2 AS INDICATED IN FILAMENT CIRCUIT R17 WAS NOT CONNECTED TO 1 OF V2 IT WAS CONNECTED TO 7 V2 WAS V3 AND V3 WAS V2 V1 ALSO HAD A SHIELD (PART NO W-144784), THE SAME AS V2 REVISING AN EARLY PRODUCTION SET TO A LATER PRODUCTION SET, AS SHOWN BY THE SOLID LINES IN SCHEMATIC WIRING DIAGRAM, IMPROVES ITS SENSITIVITY AND STABILITY

INTERMEDIATE FREQUENCY: 455 kc.
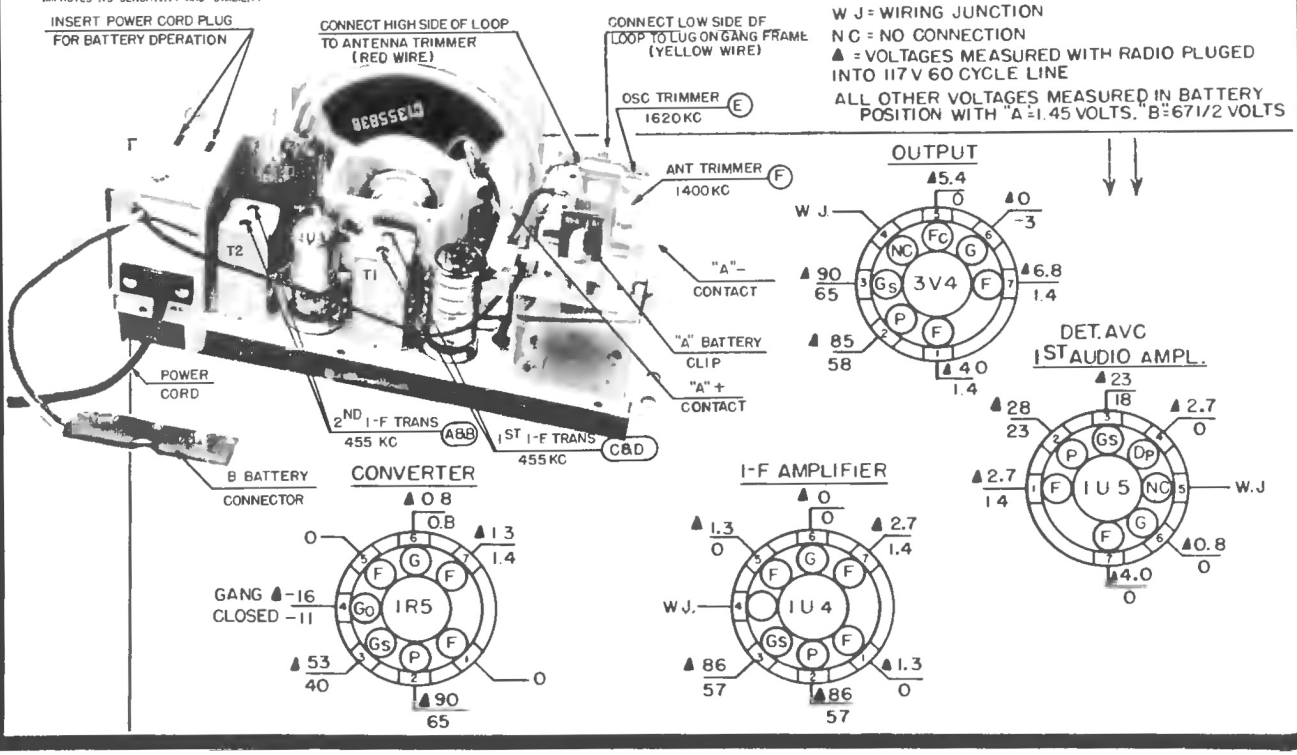
BOTTOM VIEW OF TUBE SOCKETS
VOLTAGES MEASURED WITH AN ELECTRONIC VOLTMETER FROM SOCKET LUG TO (B-)
W J = WIRING JUNCTION
N C = NO CONNECTION
▲ = VOLTAGES MEASURED WITH RADIO PLUGED INTO 117 V 60 CYCLE LINE
ALL OTHER VOLTAGES MEASURED IN BATTERY POSITION WITH "A"=1.45 VOLTS, "B"=67 1/2 VOLTS