CROSLEY RADIO MODEL 52-TP — CHASSIS No. 72

REPLACING TUBES—To gain access to the tubes, remove cabinet back, remove two screws holding loop antenna to rear of chassis and lay antenna down. Do not disconnect antenna from chassis.

If at any time it is necessary to replace one or more tubes, Figure 1 will show the correct position and function of each type of tube.

If your receiver fails to operate make sure all tubes are pressed down in their respective sockets and that power cord plug is tight in the house receptacle. Should a visual inspection fail to indicate the trouble, call a competent radio service man—preferably your nearest Crosley dealer.

Specially designed parts of the highest quality are used throughout in the construction of all Crosley products. In order that the original fine quality and excellent performance of this receiver may be maintained, it is recommended that only GENUINE CROSLEY PARTS be used should service be required.

ALIGNMENT PROCEDURE

Preliminary

Output Meter Connections . . . . . Plate and screen of 50L6

Generator Ground Connections . . . Ground Lead and Chassis

Dummy Antenna to be in series with generator output

Position of Volume Control . . . . . Fully on

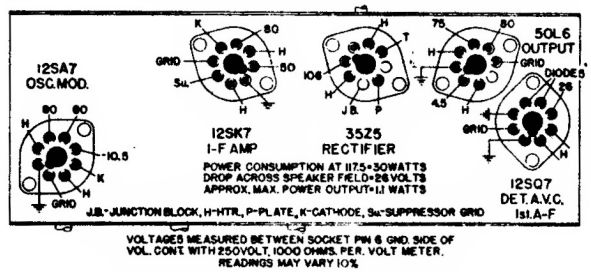

Alignment Sequence	Dummy Antenna	Frequency Setting	Input Connection to Receiver	Band Switch	Tuning Cond. Setting	Trimmer Adjusted	Remarks
1.	.0001 MF.	455 KC.	Antenna Lead	BC	Fully Open	1st I-F(2) 2nd I-F(2)	Adjust for maximum signal. Adjust for maximum signal.
2.	400 ohm Carbon Resistor	15.3 MC.	Antenna Lead (red)	S.W.	Fully Open	S.W. "Osc."	Adjust for maximum output.
3.	400 ohm Carbon	15.0 MC.	Antenna Lead (red)	S.W.	15 on Dial	S.W."Ant."	Adjust for maximum signal while rocking gang through it.
4.	.0001 MF.	1650 KC.	Antenna Lead (red)	BC	Fully Open	B.C."Osc."	Adjust for maximum output. Gang does not have to tune through signal
5.	.0001 MF.	1400 KC.	Antenna Lead (red)	BC	140 Dial	B.C."Ant."	Adjust for maximum output.
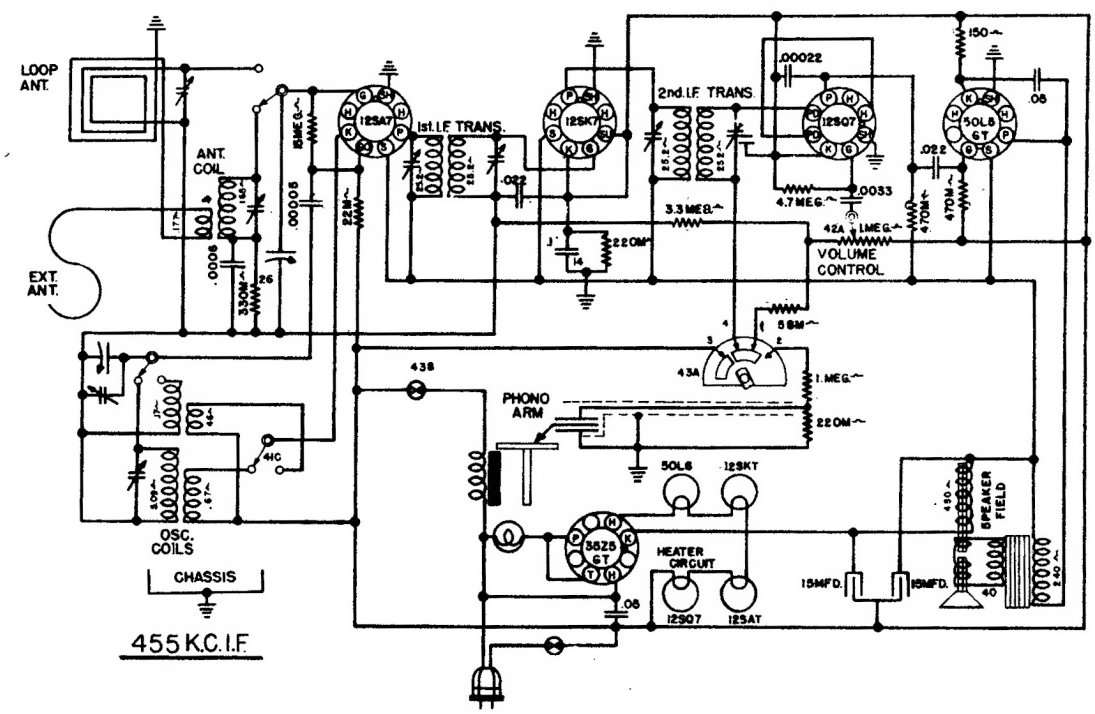
When aligning the shortwave band "OSC" trimmer, care must be exercised to see that the circuit is aligned on the correct frequency and not on the image which is approximately 910 kilocycles less as indicated on the dial. To check, increase generator output, tune in the generator frequency and then tune in the image frequency which should be weaker than the fundamental and come in approximately 910 kilocycles lower on the dial than the fundamental. If image cannot be tuned in, the "OSC" trimmer is adjusted to the wrong peak. (Correct peak is the second peak on trimmer from the closed position.) Repeat original alignment procedure for more accurate adjustments. Keep signal generator output low as possible to prevent action of A.S.C. circuit.