CROSLEY

CHASSIS 115F
MODELS: F115MN, F115GN, F115TN

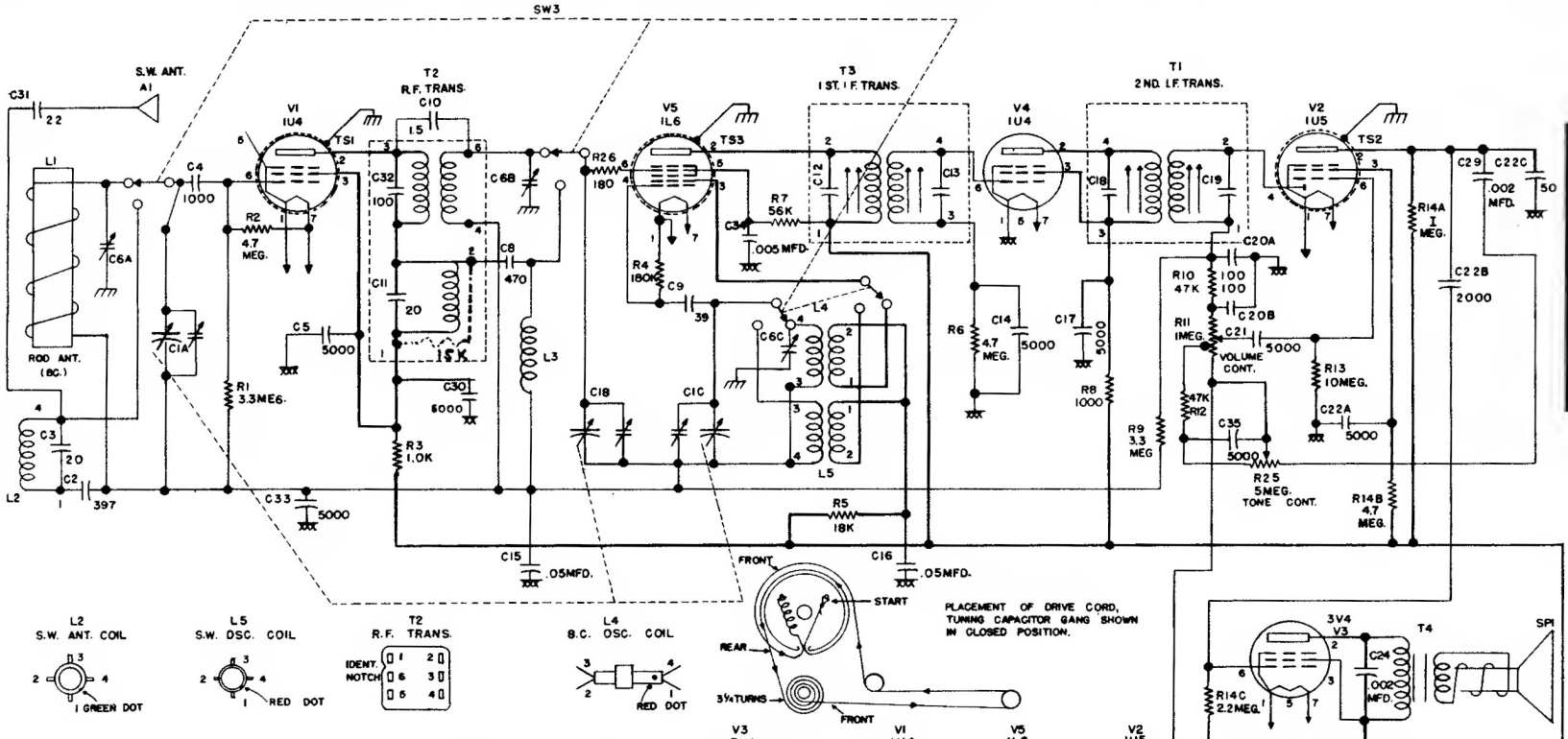

NOTES

1. K = 1000
2. I.-F. = 455 KC
3. ALL CAPACITANCE VALUES IN MMF. AND ALL RESISTANCE VALUES IN OHMS UNLESS OTHERWISE NOTED.
4. NUMBER ONE TERMINAL ON I.F. TRANS. CODED WITH GREEN DOT, NUMBERS PROGRESS CLOCKWISE.
5. DENOTES COMMON WIRING. DENOTES CHASSIS.
6. SWITCH SW1 IS SHOWN IN LINE OPERATING POSITION.
7. SWITCH SW3 IS SHOWN IN BC. POSITION

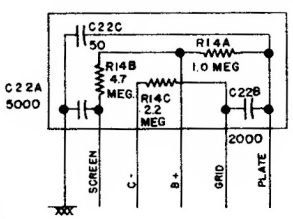

FREQUENCY RANGE: 540 to 1600 Kc.
8.4 to 15.4 Mc.

INTERMEDIATE FREQUENCY: 455 Kc.

CROSLEY Chassis 115F, Models F115GN, F115MN, and F115TN

ALIGNMENT CHART

SEQUENCE	SIGNAL GENERATOR OUTPUT			POSITION OF		ADJUST FOR MAX. OUTPUT	REMARKS
	FREQUENCY	IN SERIES WITH	TO	RANGE SWITCH	TUNING DIAL		
1	455Kc	.05 mfd	Note 1	S.W.	Gang open	A,B,C,D	Note 1
	Repeat adjustments to obtain maximum output						Note 2
2	15.7Mc	Dummy	S.W. Antenna	S.W.	Gang open	E	Note 3 & 6
3	15Mc	Dummy	S.W. Antenna	S.W.	Tune in Sig.	F,G	Note 3 & 4
4	1620Kc	Radiated	B.C. Antenna	B.C.	Gang open	H	Note 5
5	1400Kc	Radiated	B.C. Antenna	B.C.	Tune in Sig.	I,J	Note 5

1. Low side of generator returned to B- on electrolytic capacitor, high side of generator connected to stator of gang capacitor, center section.
2. After aligning I-F Transformers, replace bottom cover of chassis.
3. Low side of generator returned to chassis, high side of generator connected to shortwave antenna through dummy.
4. Peak center trimmer (mixer section) and rear trimmer (antenna section by rocking gang to secure maximum output.)
5. Radiate signal from generator to rod antenna by placing wire attached to high side of generator close to the rod antenna opposite to the end that is wired to the gang stator.
6. Do not align the shortwave oscillator to image at 14 megacycles.

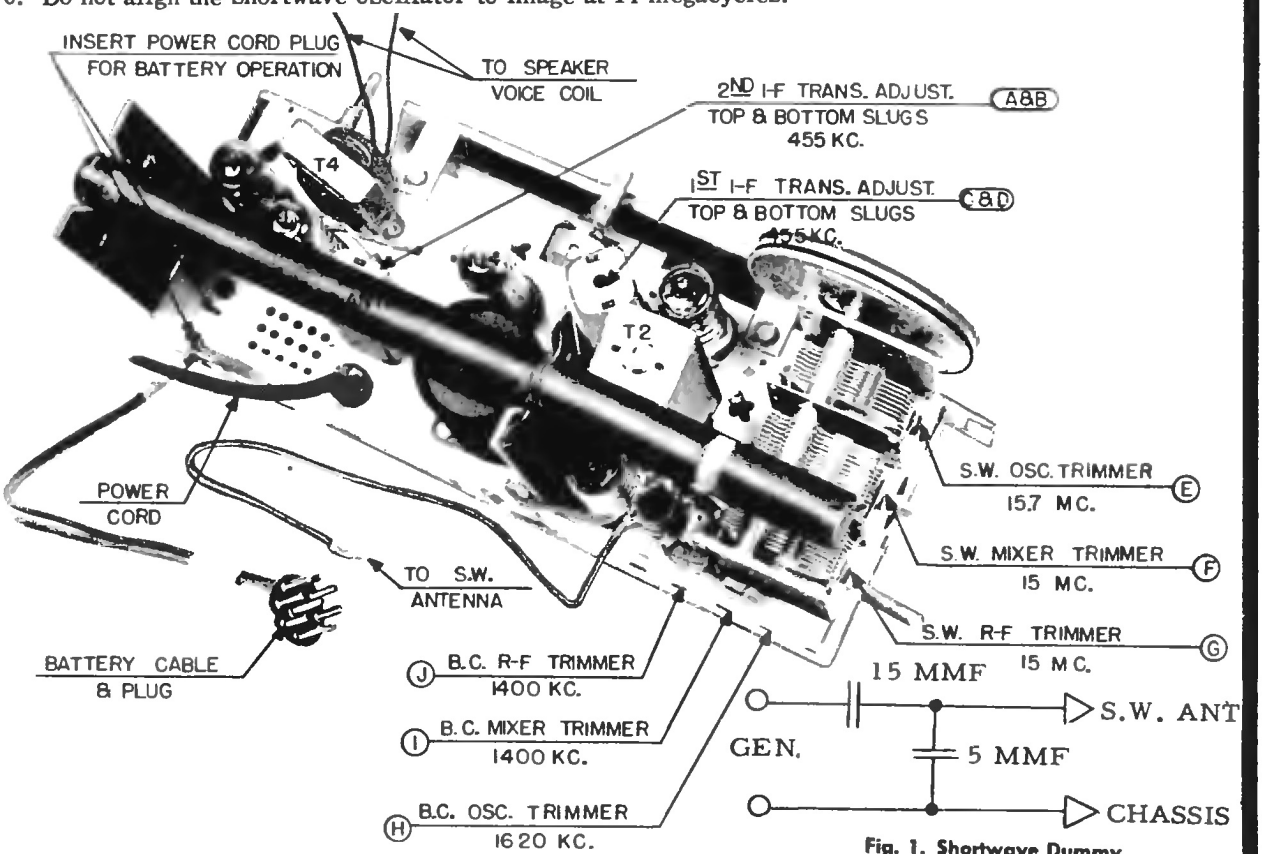

Fig. 1. Shortwave Dummy