CROSLEY

Chassis R102

Models:

JM-8BG	JM-8GN
JM-8BK	JM-8MN
JM-8BN	JM-8WE

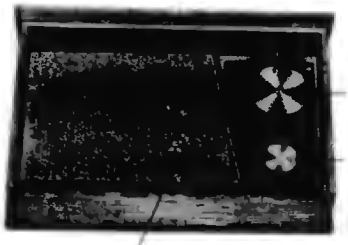

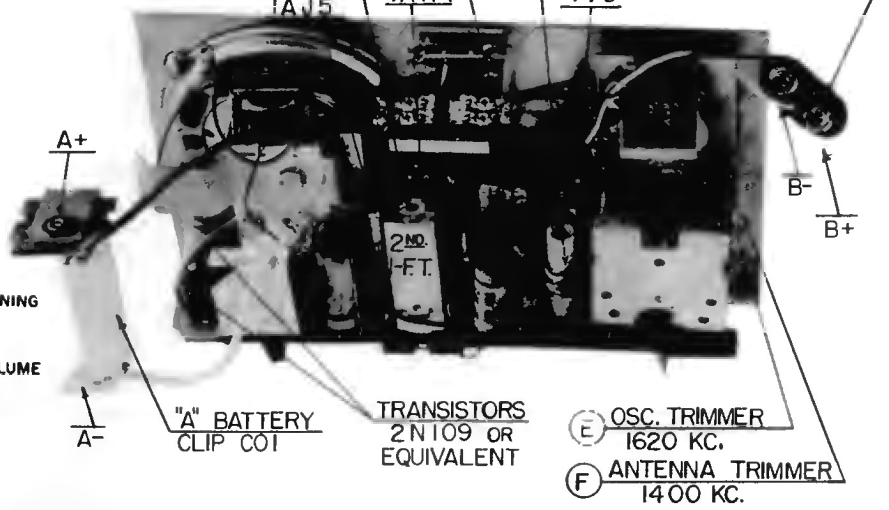

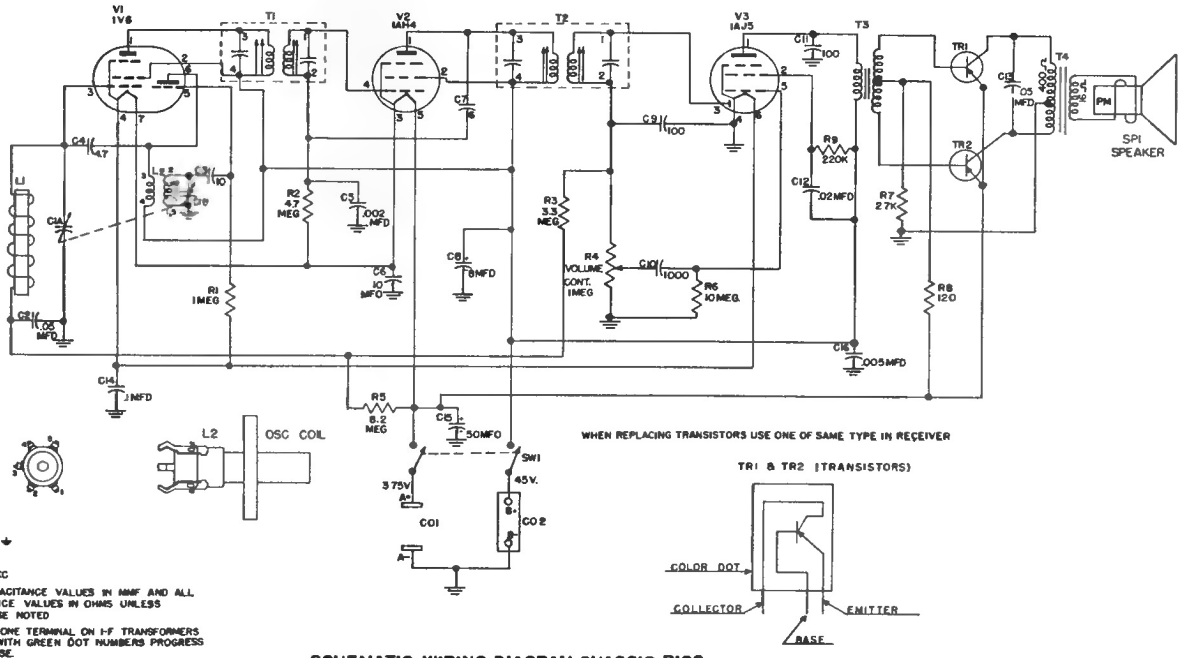

NOTES:
1. CHASSIS ⏚
2. K=1000
3. I-F=455KC
4. ALL CAPACITANCE VALUES IN MMF AND ALL RESISTANCE VALUES IN OHMS UNLESS OTHERWISE NOTED
5. NUMBER ONE TERMINAL ON I-F TRANSFORMERS CODED WITH GREEN DOT NUMBERS PROGRESS CLOCKWISE.
6. COLOR DOT ON SIDE OF TUBE INDICATES NO. 1 PIN.

SCHEMATIC WIRING DIAGRAM CHASSIS R102

SOCKET VOLTAGE CHART

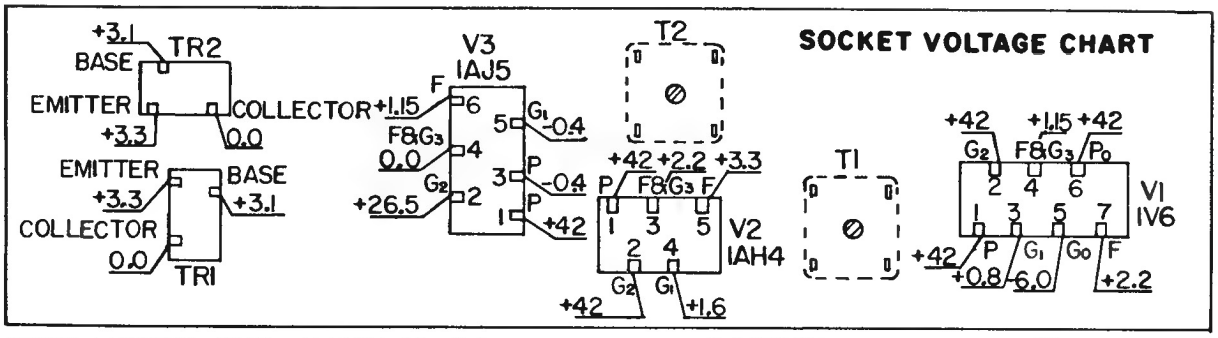

NOTES: 1. BOTTOM VIEW OF TUBE SOCKETS.

2. VOLTAGE MEASURED WITH AN ELECTRONIC VOLTMETER FROM SOCKET LUG TO CHASSIS.

3. BATTERY SUPPLY VOLTAGE "A" BATTERY 3.3V. "B" BATTERY 42V.

4. SOCKET VOLTAGE TOLERANCE ±10%