CROSLEY

CHASSIS 5060P

Models: P-50BG, P-50BK, P-50WE

Models: P-60GY P-60RD, P-60BE, P-60PK

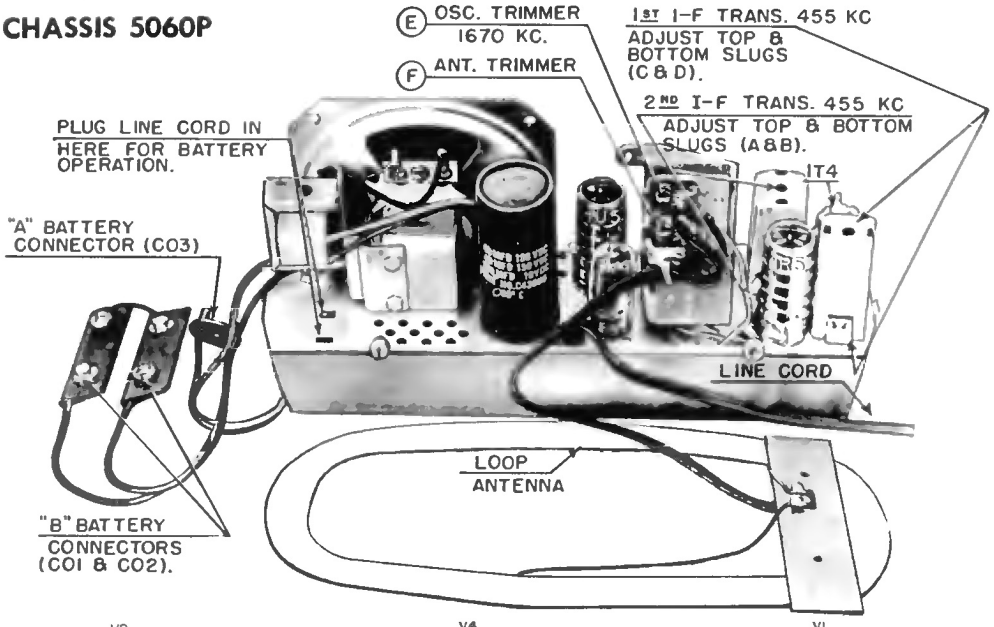

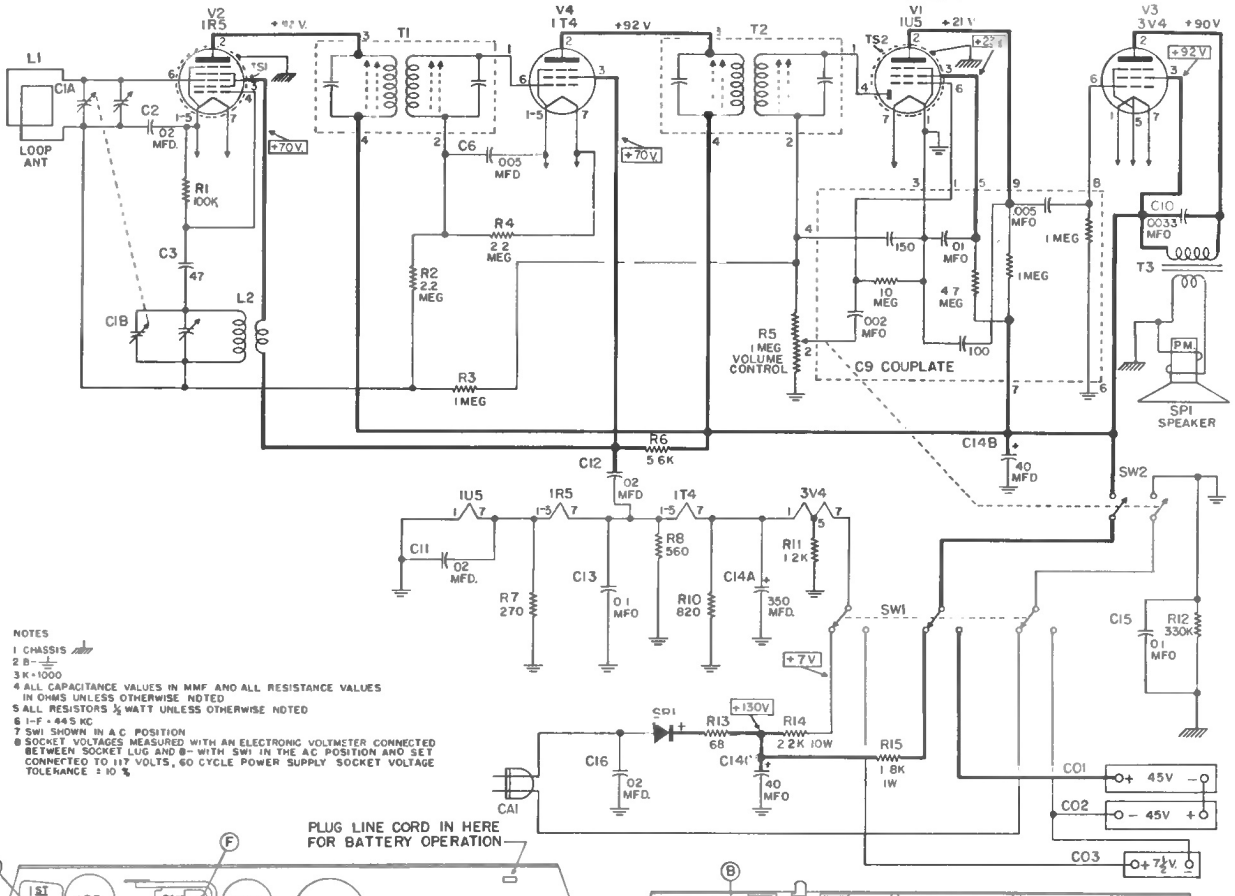
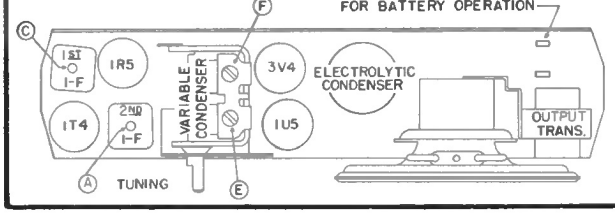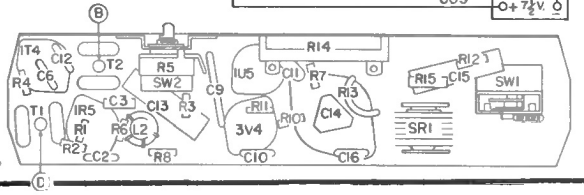
NOTES
1 CHASSIS
2 B- ⏚
3 K = 1000
4 ALL CAPACITANCE VALUES IN MMF AND ALL RESISTANCE VALUES IN OHMS UNLESS OTHERWISE NOTED
5 ALL RESISTORS ½ WATT UNLESS OTHERWISE NOTED
6 I-F = 445 KC
7 SW1 SHOWN IN A C POSITION
8 SOCKET VOLTAGES MEASURED WITH AN ELECTRONIC VOLTMETER CONNECTED BETWEEN SOCKET LUG AND B- WITH SW1 IN THE AC POSITION AND SET CONNECTED TO 117 VOLTS, 60 CYCLE POWER SUPPLY SOCKET VOLTAGE TOLERANCE ± 10 %