DELCO

BUICK MODEL 980132
OLDSMOBILE MODEL 989387

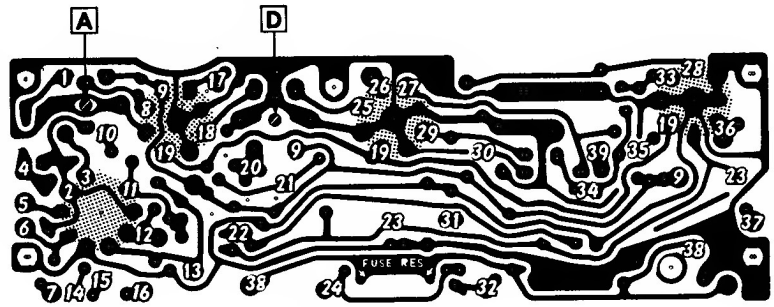

BOTTOM VIEW

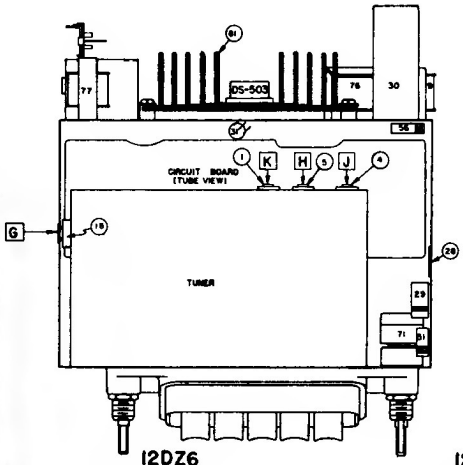

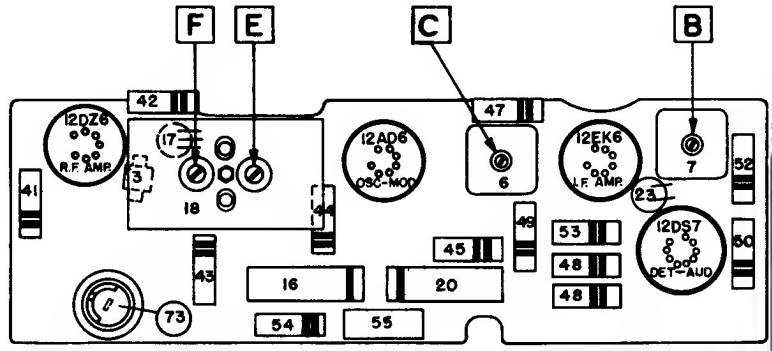

TOP VIEW

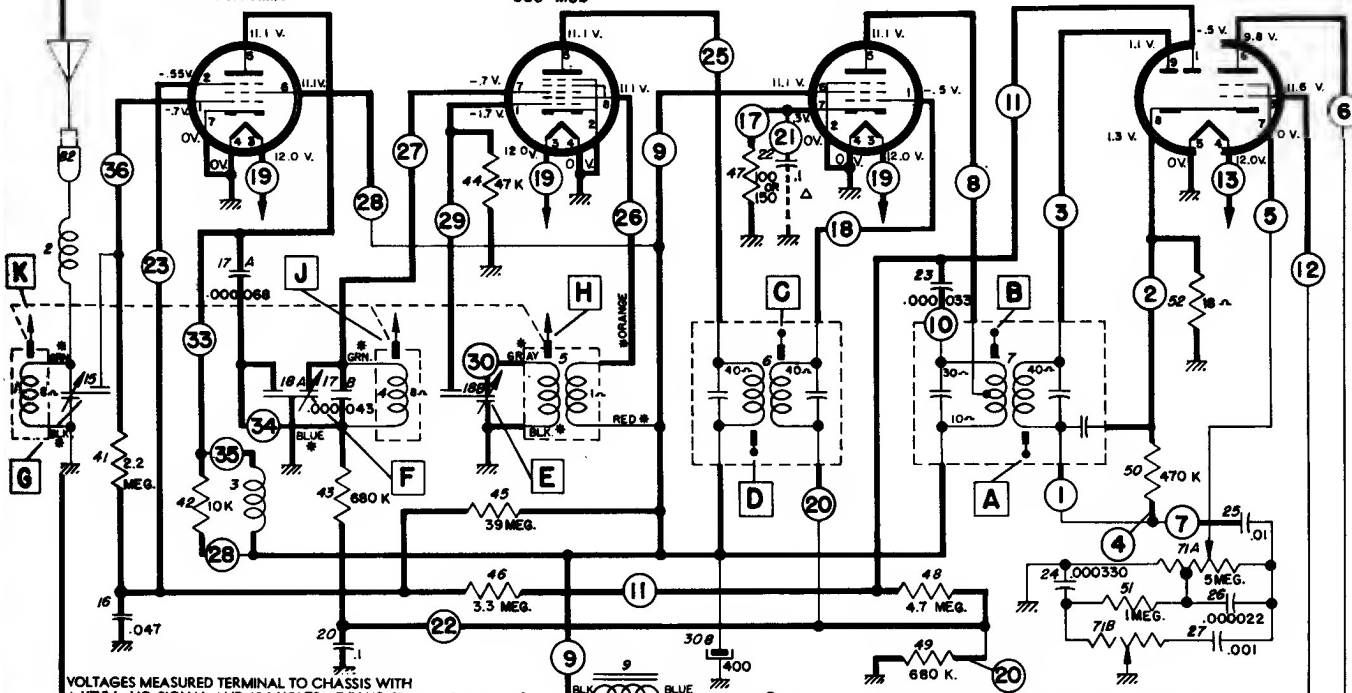

VOLTAGES MEASURED TERMINAL TO CHASSIS WITH A VTVM – NO SIGNAL AND 12.0 VOLTS AT ILLUS. 28.

OSCILLATOR GRID VOLTAGE TAKEN WITH SET TUNED TO 1000 KC.

TOTAL "A" DRAIN AT 12V.–1.6 AMPS.

TOLERANCE ON VOLTAGES ±10%

*– INDICATES LEAD FROM TUNER COIL ASS'Y.

**– BEFORE MEASURING TRANSISTOR VOLTAGES, THE SHORTING TYPE SPEAKER SOCKET MUST BE OPENED AND A 4 OHM SPEAKER CONNECTED. IF TRANSISTOR IS REPLACED, ADJUST BIAS POTENTIOMETER (ILLUS. 73) TO OBTAIN PROPER COLLECTOR VOLTAGE WITH 12 VOLTS INPUT TO RADIO.

+– ILLUS. 55 IS A FUSE RESISTOR FOR THE TRANSISTOR. SERVICE WITH EXACT REPLACEMENT.

⊖– OUTPUT TRANSFORMER WILL APPEAR SHORTED IF SHORTING TYPE SPEAKER SWITCH IS NOT HELD OPEN.

△– ILLUS. 22 IS USED WHEN ILLUS. 47 IS 150 OHMS.

BUICK 980132—PRINTED CIRCUIT SHOWN IN HEAVY LINES

DELCO Alignment Procedure for Various 1961 Auto Radios

Output Meter Connections ..... Across Voice Coil
Generator Return ..... To Receiver Chassis
Dummy Antenna ..... In Series With Generator
Volume Control Position ..... Maximum Volume
Generator Output ..... Minimum for Readable Indication

TABLE 1, Alignment for Buick 980134, Chevrolet 988414, Chevrolet Corvair 988468

STEP	SERIES CONDENSER OR DUMMY ANTENNA	CONNECT SIGNAL GENERATOR TO	SIGNAL GENERATOR FREQUENCY	TUNE RECEIVER TO	ADJUST IN SEQUENCE FOR MAX OUTPUT
1	0.1 Mfd.	12AD6 Grid (Pin #7)	262 KC	High Frequency Stop	A, B, D, C
2	.000082 Mfd.	Antenna Connector	1615 KC	High Frequency Stop	*E, F, G
3	.000082 Mfd.	Antenna Connector	600 KC	Signal Generator Signal	J, K
4	.000082 Mfd.	Antenna Connector	1615 KC	High Frequency Stop	F, G
5	.000082 Mfd.	Antenna Connector	1100 KC	Signal Generator Signal	L**

TABLE 2, Alignment for Oldsmobile 989392 and Pontiac Model 989693

STEPS	SERIES CAPACITOR OR DUMMY ANTENNA	CONNECT SIGNAL GENERATOR TO	SIGNAL GENERATOR FREQUENCY	TUNE RECEIVER TO	ADJUST IN SEQUENCE FOR MAX. OUTPUT
1	0.1 Mfd.	12AD6 Grid (Pin #7)	262 KC	High Frequency Stop	A, B, C, D
2	0.000068 Mfd.	Antenna Connector	1615 KC	High Frequency Stop	*E, F, G
3	0.000068 Mfd.	Antenna Connector	600 KC	Signal Generator Signal	J, K
4	0.000068 Mfd.	Antenna Connector	1615 KC	High Frequency Stop	F, G
5	0.000068 Mfd.	Antenna Connector	1100 KC	Signal Generator Signal	L**

TABLE 3, Alignment for Buick 980132 and Oldsmobile Model 989387

STEPS	SERIES CONDENSER OR DUMMY ANTENNA	CONNECT SIGNAL GENERATOR TO	SIGNAL GENERATOR FREQUENCY	TUNE RECEIVER TO	ADJUST IN SEQUENCE FOR MAX. OUTPUT
1	0.1 Mfd.	12AD6 Grid (Pin #7)	262 KC	High Frequency Stop	A, B, D, C
2	.000082 Mfd.	Antenna Connector	1615 KC	High Frequency Stop	*E, F, G
3	.000082 Mfd.	Antenna Connector	600 KC	Signal Generator Signal	J, K
4	.000082 Mfd.	Antenna Connector	1615 KC	High Frequency Stop	F, G
5	.000082 Mfd.	Antenna Connector	900 KC	Signal Generator Signal	L***

TABLE 4, Alignment for Chevrolet Model 988413

STEPS	SERIES CAPACITOR OR DUMMY ANTENNA	CONNECT SIGNAL GENERATOR TO	SIGNAL GENERATOR FREQUENCY	TUNE RECEIVER TO	ADJUST IN SEQUENCE FOR MAX. OUTPUT
1	0.1 Mfd.	12AD6 Grid (Pin #7)	262 KC	High Frequency Stop	A, B, C, D,
2	0.000082 Mfd.	Antenna Connector	1615 KC	High Frequency Stop	*E, F, G,
3	0.000082 Mfd.	Antenna Connector	600 KC	Signal Generator Signal	J, K
4	0.000082 Mfd.	Antenna Connector	1615 KC	High Frequency Stop	F, G

*Before making this adjustment check mechanical setting of oscillator core "H." The rear of the core should be 1⅝" from the mounting end of the coil form. (This measurement is readily made by inserting a suitable plug in the mounting end of the coil form.) Core adjustment should be made with a non-metallic screw driver.

**L is the pointer adjustment screw which is on the connecting link, between the pointer assembly and the parallel guide bar. It should be adjusted so that the dial pointer corresponds with the 1100 K.C. mark on the dial.

***L is the pointer adjustment screw which is on the connecting link, between the pointer assembly and the parallel guide bar. It should be adjusted so that the dial pointer corresponds with the 900 KC mark on the dial.

With the radio installed and the car antenna plugged in, adjust the antenna trimmer "G" for maximum volume with the radio tuned to a weak station between 600 and 1000 KC (see sticker on case.)