Delco

BUICK Model 980296
CHEVROLET Model 985264
PONTIAC Models 983579, 983687
STUDEBAKER Models AC-3216, AC-3247, AC-3256

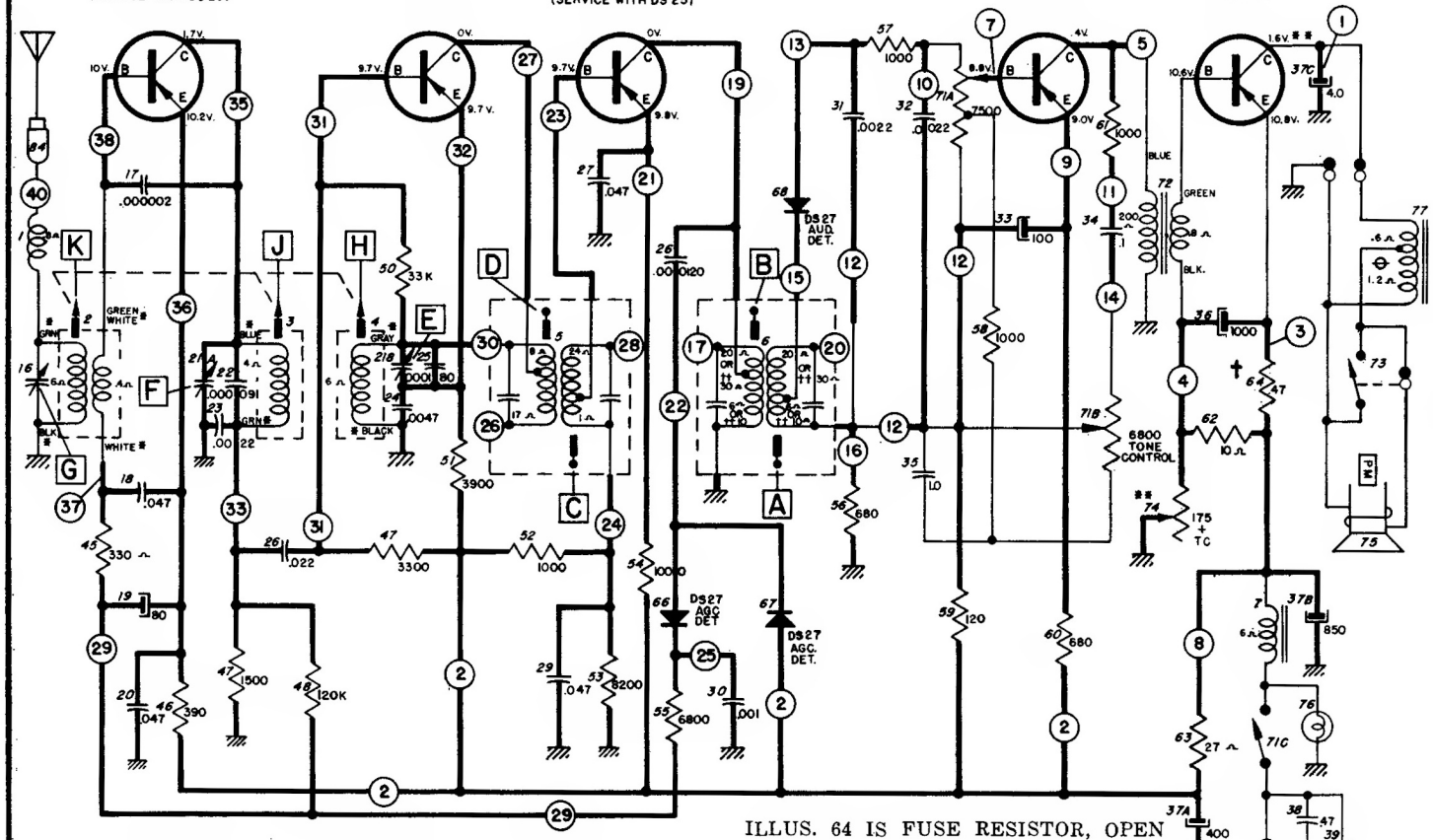

BUICK 980296—PRINTED CIRCUIT SHOWN IN HEAVY LINES

ILLUS. 64 IS FUSE RESISTOR, OPEN FUSE RESISTOR MAKES TRANSISTOR COLLECTOR VOLTAGE 0 VOLTS.

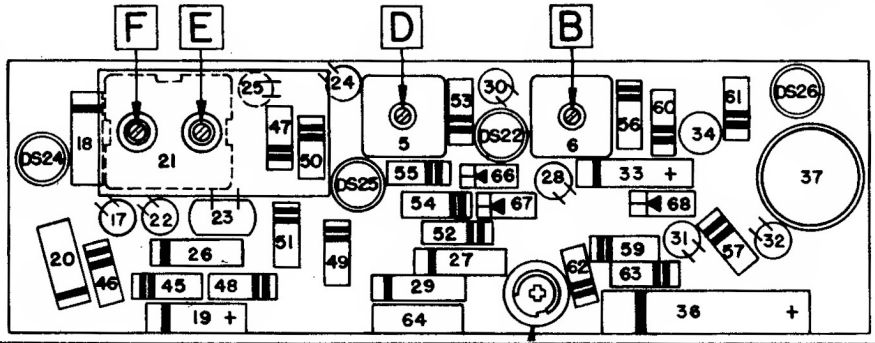

VOLTAGES MEASURED TERMINAL TO CHASSIS WITH A VOM—NO SIGNAL AND 12.0 VOLTS AT ILLUS. 39.

TOTAL "A" DRAIN AT 12V.—1.2 AMPS.
TOLERANCE ON VOLTAGES ± 10%

*—INDICATES LEAD FROM TUNER COIL ASS'Y.

**—BEFORE MEASURING TRANSISTOR VOLTAGES, THE SHORTING TYPE SPEAKER SOCKET MUST BE OPENED AND A 4 OHM SPEAKER CONNECTED, IF TRANSISTOR IS REPLACED, ADJUST BIAS POTENTIOMETER (ILLUS. 74) TO OBTAIN PROPER COLLECTOR VOLTAGE WITH 12 VOLTS INPUT TO RADIO.

†—ILLUS. 64 IS A FUSE RESISTOR FOR THE TRANSISTOR. SERVICE WITH EXACT REPLACEMENT.

⊖—OUTPUT TRANSFORMER WILL APPEAR SHORTED IF SHORTING TYPE SPEAKER SWITCH IS NOT HELD OPEN.

DELCO RADIO
BUICK Model 980296
CHEVROLET Model 985264
PONTIAC Models 983579, 983687
STUDEBAKER Models AC-3216, AC-3247, AC-3256

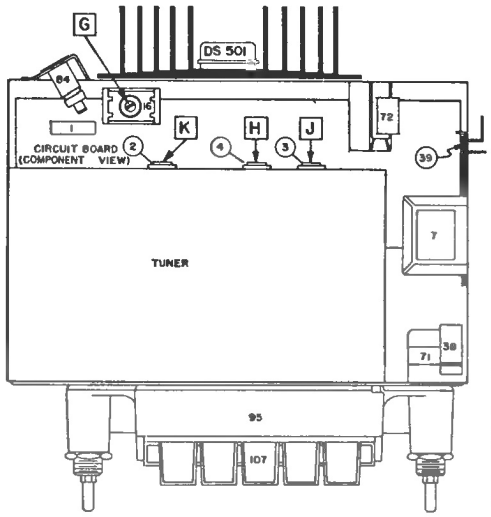

I. TROUBLESHOOTING PROCEDURE

1. Turn radio on (ear near speaker). If no "thump" is heard, suspect: open fuse, open "Fuse resistor," loose speaker plug, open speaker, or shorted DS501 transistor.

2. Isolate trouble to a stage (AF, IF, Conv., RF—see letters on circuit board below). Use a noise generator or other device at each point, starting with 1.

3. Measure voltages in defective stage. Note: Voltage between 10.8 V. line (conductor #2) & emitter (E) of each stage checks conduction of that stage.

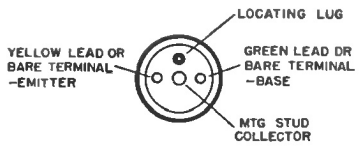

DS 501—Transistor Terminals

NOTE: Mtg. insulators, #1221642, not packaged with DS-501. These insulators are not required if radiator is insulated from case.

II. VOLTAGE AND TROUBLE HINTS

Stage Voltage (B, C, E, to ground)	Bias Voltage (B to E)	Defect	Quick Check to Confirm
Normal	Over .5 V.	Open small transistor	*Bridge good one across old one
Normal	Normal	Open capacitor	Bridge good one across old one
E is zero	Wrong polarity	Shorted emitter cap.	Ohmmeter
C is 11 V.	Normal	Open collector circuit	Ohmmeter
E is very low.	"0" or reversed	Open emitter circuit	Ohmmeter
Normal	Normal	Defective IF	Ohmmeter & try for peak.

* Small transistors may be checked for open by bridging a good one across (without unsoldering old one). All three leads must be firmly connected. If radio starts playing, replace old one.

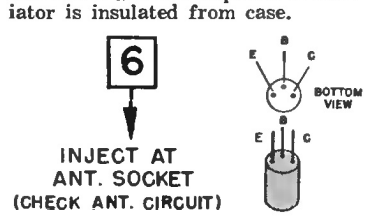

DS-22, 24, 25 and 26 Transistor Terminals

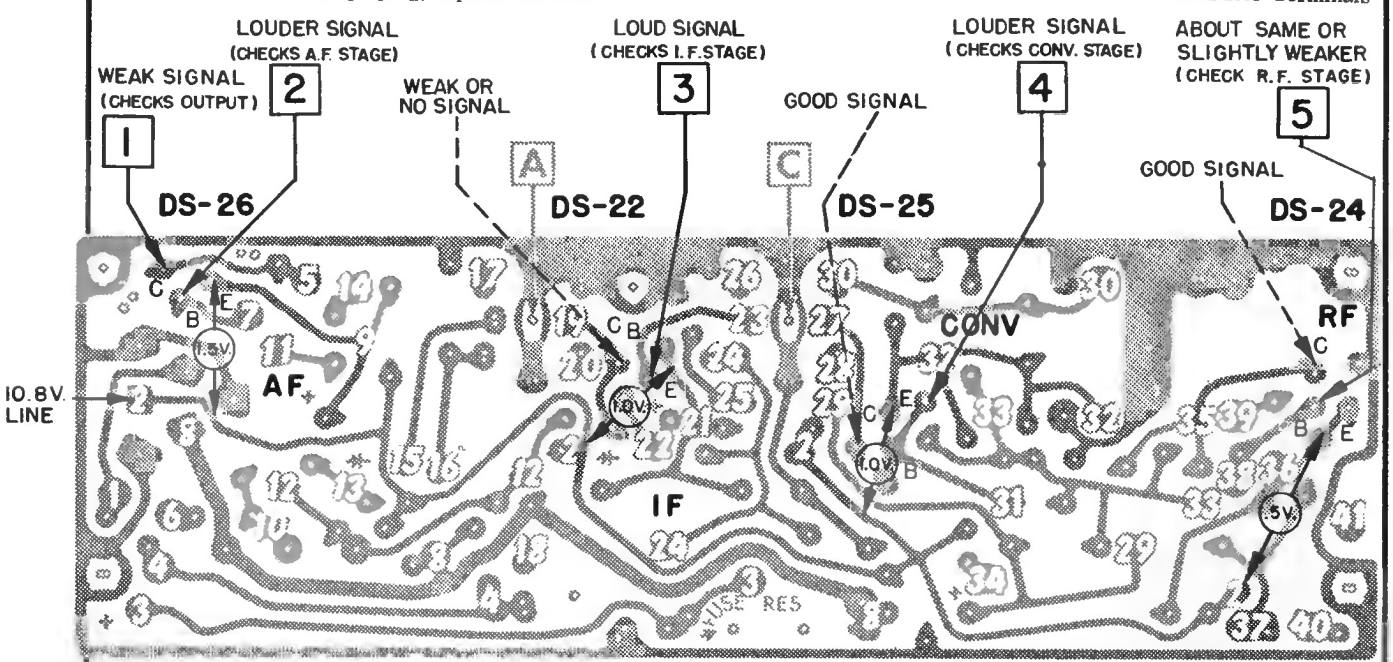

CIRCUIT BOARD (PRINTED VIEW)

NUMBERS IN SQUARES ARE MAJOR TEST POINTS FOR STAGE ISOLATION—INJECT SIGNAL

Delco

LATE PRODUCTION CHANGES

Models Involved

Pontiac PB - 983579
Tempest PB - 983687
Buick PB - 980296
Special PB - 980316
Studebaker PB-AC-3216, AC-3247, AC-3256

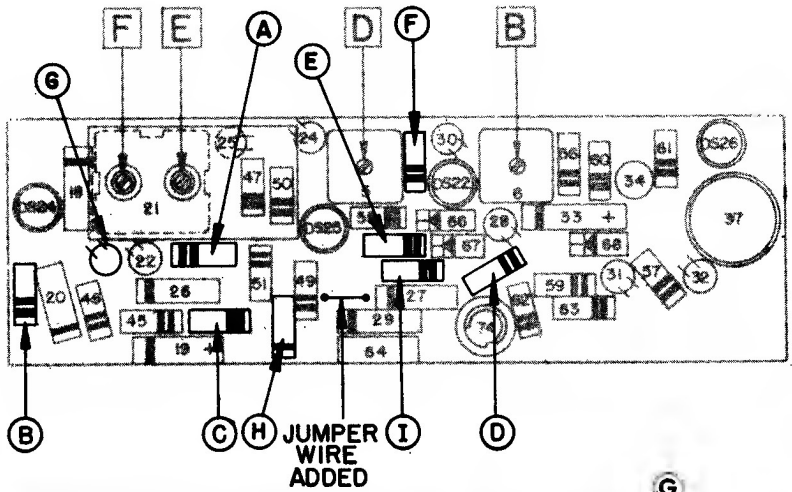

Parts Added

Description

560 ohm, ½ watt
15 ohm, ½ watt
33,000 ohm, ½ watt

Changes (Refer to component view.)

A - Add 560 ohm resistor, ½ watt
B - Add 15 ohm resistor, ½ watt
C - Change from 120K to 150K ohms
D - Change from 1000 to 4700 ohms
E - Add 33K ohm resistor, ½ watt
F - Change from 8.2K ohm (6.8K ohm in models 983687 & 980316) to 33K ohm.
G - Remove .000002 mfd. capacitor (replaced by printed capacitor.)
H - .0022 mfd. tubular capacitor replaces disc type and is mounted in new location on the printed circuit board.
I - 1000 ohm resistor is mounted in new location on printed circuit board.

Island #2 is separated into two parts, and interconnected with a jumper wire.

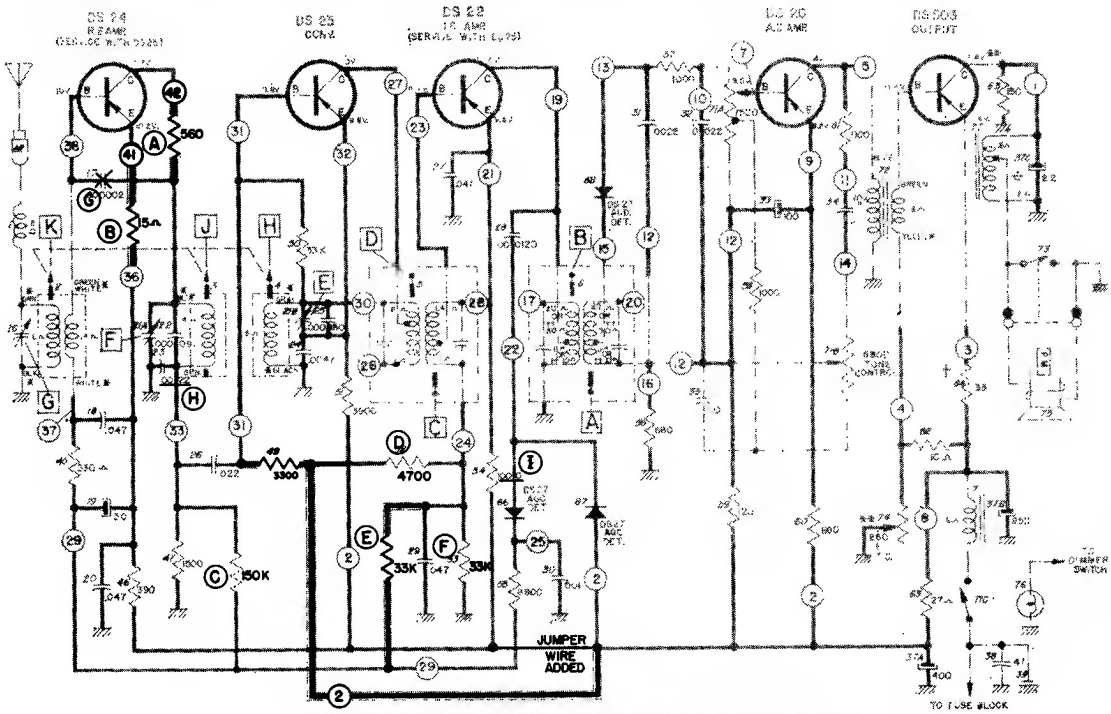

SCHEMATIC DIAGRAM—CHANGES IN SOLID LINES

Delco

BUICK MODEL 980316

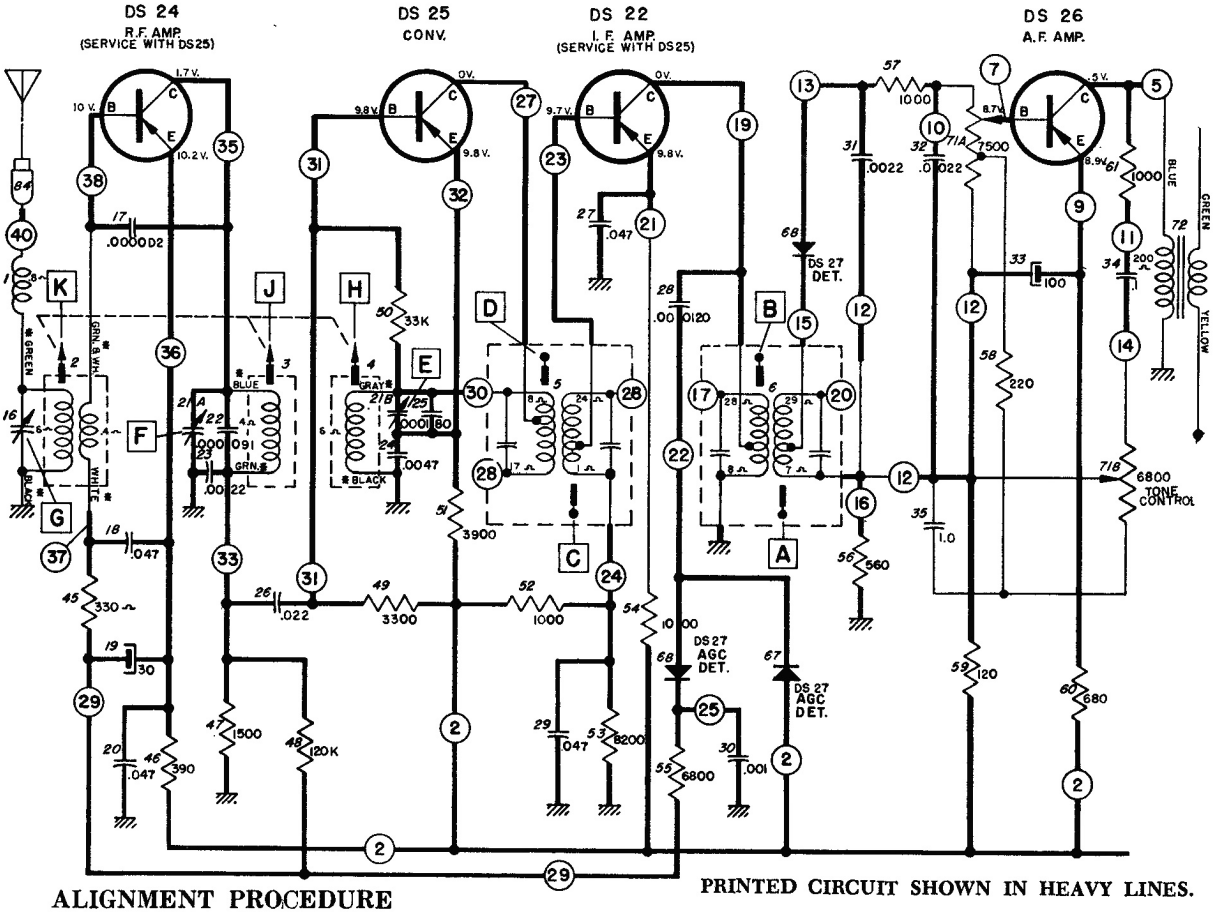

PRINTED CIRCUIT SHOWN IN HEAVY LINES.

ALIGNMENT PROCEDURE

Output Meter Connections.....Across Voice Coil

Generator Return.....To Receiver Chassis

Dummy Antenna.....In Series With Generator

Volume Control Position.....Maximum Volume

Generator Output.....Minimum for Readable Indication

STEPS	SERIES CAPACITOR OR DUMMY ANTENNA	CONNECT SIGNAL GENERATOR TO	SIGNAL GENERATOR FREQUENCY	TUNE RECEIVER TO	ADJUST IN SEQUENCE FOR MAX. OUTPUT
1	0.1 Mfd.	DS-25 Converter Base	262 KC	High Frequency Stop	A, B, C, D
2	.000082 Mfd.	Antenna Connector	1615 KC	High Frequency Stop	*E, F, G
3	.000082 Mfd.	Antenna Connector	600 KC	Signal Generator Signal	J, K
4	.000082 Mfd.	Antenna Connector	1615 KC	High Frequency Stop	F, G
5	.000082 Mfd.	Antenna Connector	1100 KC	Signal Generator Signal	L**

*Before making this adjustment check mechanical setting of oscillator core "H". The rear of the core should be 1⅝" from the mounting end of the coil form. (This measurement is readily made by inserting a suitable plug in the mounting end of the coil form.) Core adjustment should be made with a non-metallic screw driver.

**L is the pointer adjustment screw which is on the connecting link, between the pointer assembly and the parallel guide bar. It should be adjusted so that the dial pointer corresponds with the 1100 K.C. mark on the dial.

With the radio installed and the car antenna plugged in adjust the antenna trimmer "G" for maximum volume with the radio tuned to a weak station between 600 - 1000 KC (see sticker on case.)

Delco Radio

OLDSMOBILE DELUXE WITH PUSHBUTTON TUNING

MODEL 982029

DS 24 R.F. AMP (SERVICE WITH DS 25)

DS 25 CONV.

DS 22 I.F. AMP (SERVICE WITH DS 25)

DS 26 A.F. AMP

DS 501 OUTPUT

DS 27 AUD. DET.

DS 27 AGC DET.

DS 27 AGC DET.

IDK TONE CONTROL

10.8 V. LINE

"A" LEAD

OLDSMOBILE 982029—PRINTED CIRCUIT SHOWN IN HEAVY LINES.

VOLTAGES MEASURED TERMINAL TO CHASSIS WITH A VOM— NO SIGNAL AND 12.0 VOLTS AT ILLUS. 39.

TOTAL "A" DRAIN AT 12V.-1.2 AMPS.

TOLERANCE ON VOLTAGES ± 10%

*—INDICATES LEAD FROM TUNER COIL ASS'Y.

**—BEFORE MEASURING TRANSISTOR VOLTAGES, THE SPEAKER AND TRANSFORMER ASS'Y MUST BE CONNECTED, IF TRANSISTOR IS REPLACED, ADJUST BIAS POTENTIOMETER (ILLUS. 74) TO OBTAIN PROPER COLLECTOR VOLTAGE WITH 12 VOLTS INPUT TO RADIO.

†—ILLUS. 64 IS A FUSE RESISTOR FOR THE TRANSISTOR. SERVICE WITH EXACT REPLACEMENT.

⊖—OUTPUT TRANSFORMER WILL APPEAR SHORTED IF SHORTING SWITCH IN REAR SPEAKER SOCKET IS NOT HELD OPEN.

††—WIRE SIZE CHANGED IN LATER PRODUCTION—COIL INTERCHANGEABLE.

Caution: Collector Voltage of DS-501 Transistor must be measured at transistor case (not at the heat radiator).

The Output Transformer is Mounted on Speaker. Do Not Operate Without it.

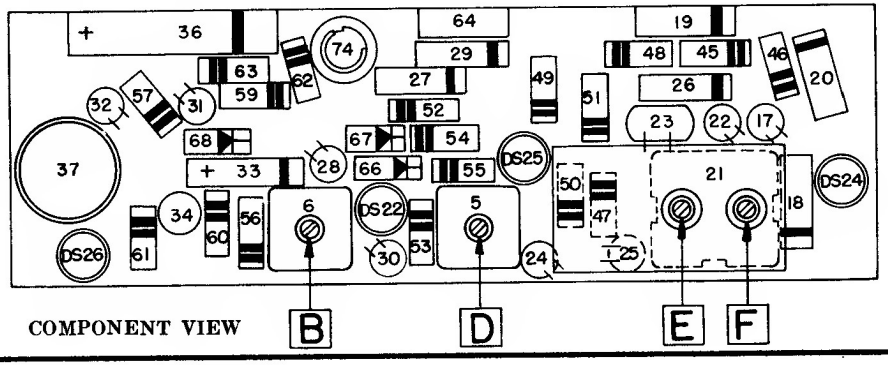

COMPONENT VIEW